REVISIONS			
LTR	DESCRIPTION	DATE	APPROVAL
J	ADD ALTERNATE PART FOR ITEM # 4	12-8-72	
K	INCORP ECO #316 ALT. FOR ITEM #18	1-73	D.G.P.
L	INCORP ECO #318, R84 WAS 3.9K IS 1.5K ADD R87. DELETE ITEM #112. ITEM #60 QTY WAS 1 IS 2. ITEM 70 QTY WAS 3 IS 4	1-73	D.G.P.
M	INCORP ECO #331. ITEM #70 P/N WAS 100-116. ITEM #71 P/N WAS 100-750	2-73	D.G.P.

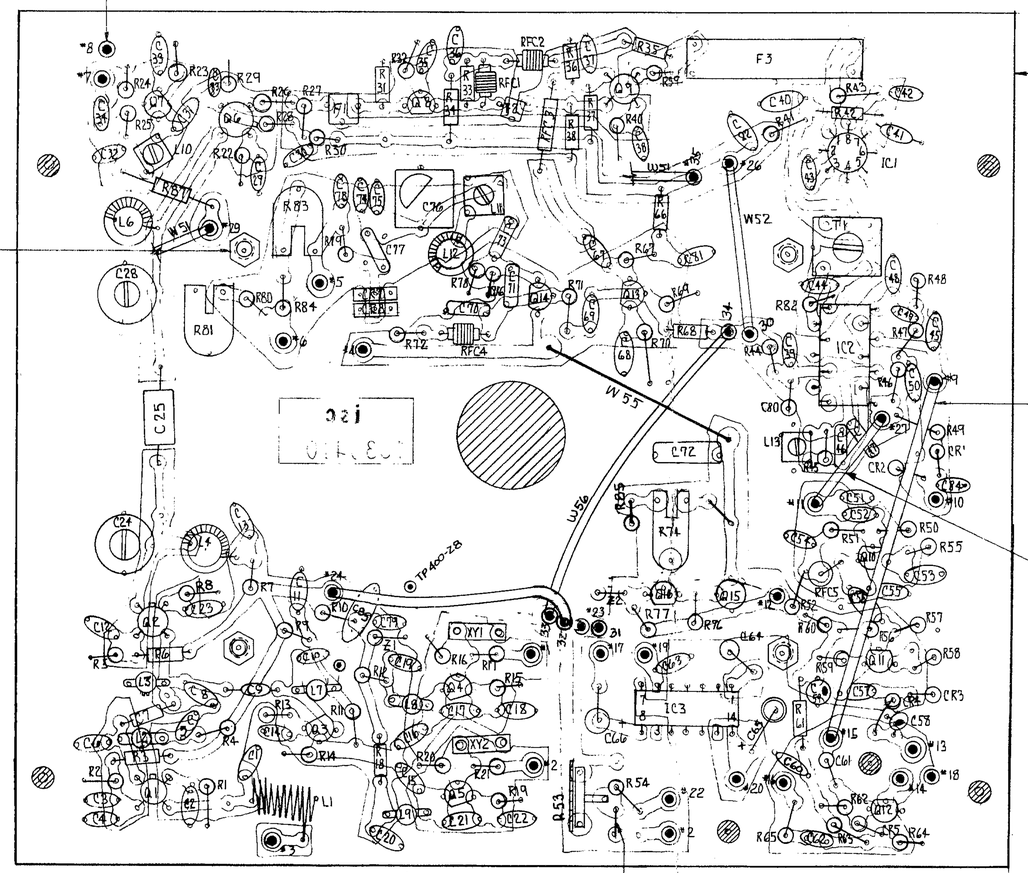

NOTES:

1. ALL SHADED AREAS REPRESENT HOLES IN THE P.C. BOARD
2. ALL TERMINAL POST NUMBERS HAVE A PREFIX OF TP-400- FOR USE WITH THE WIRING LIST.
3. WHEN ASSEMBLING HEX SPACERS TO P.C. BOARD THE FIBER WASHER, ITEM #101, WILL BE ON THE FOIL SIDE OF THE BOARD & THE LOCK WASHER ITEM #103, WILL BE BETWEEN THE SPACER AND THE BOARD.

DIODES WILL BE ASSEMBLED ON P.C BOARDS WITH THEIR BANDS TOWARDS THE LOOP END.

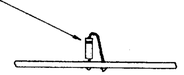

DETAIL — DIODE ASSEMBLY

INTERNATIONAL SIGNAL AND CONTROL CORP.
LANCASTER PENNA. 17601

SCALE: NONE	APPROVED BY J.P. Campbell 9/1/72	DRAWN BY C.K.
DATE: 8:30:72		

RCVR. P.C. BOARD ASSEMBLY

FM-27.

DRAWING NUMBER 0100450

REVISIONS			
LTR	DESCRIPTION	DATE	APPROVED
L	ADD ALTERNATE PART FOR ITEM #14	12.72	
M	HARDWARE ECO #345 ALT. PART FOR ITEM 10	1-73	D.G.P.
N	HARDWARE ECO #347, RAD R5 1.5K, R6 3.9K	1-73	D.G.P.

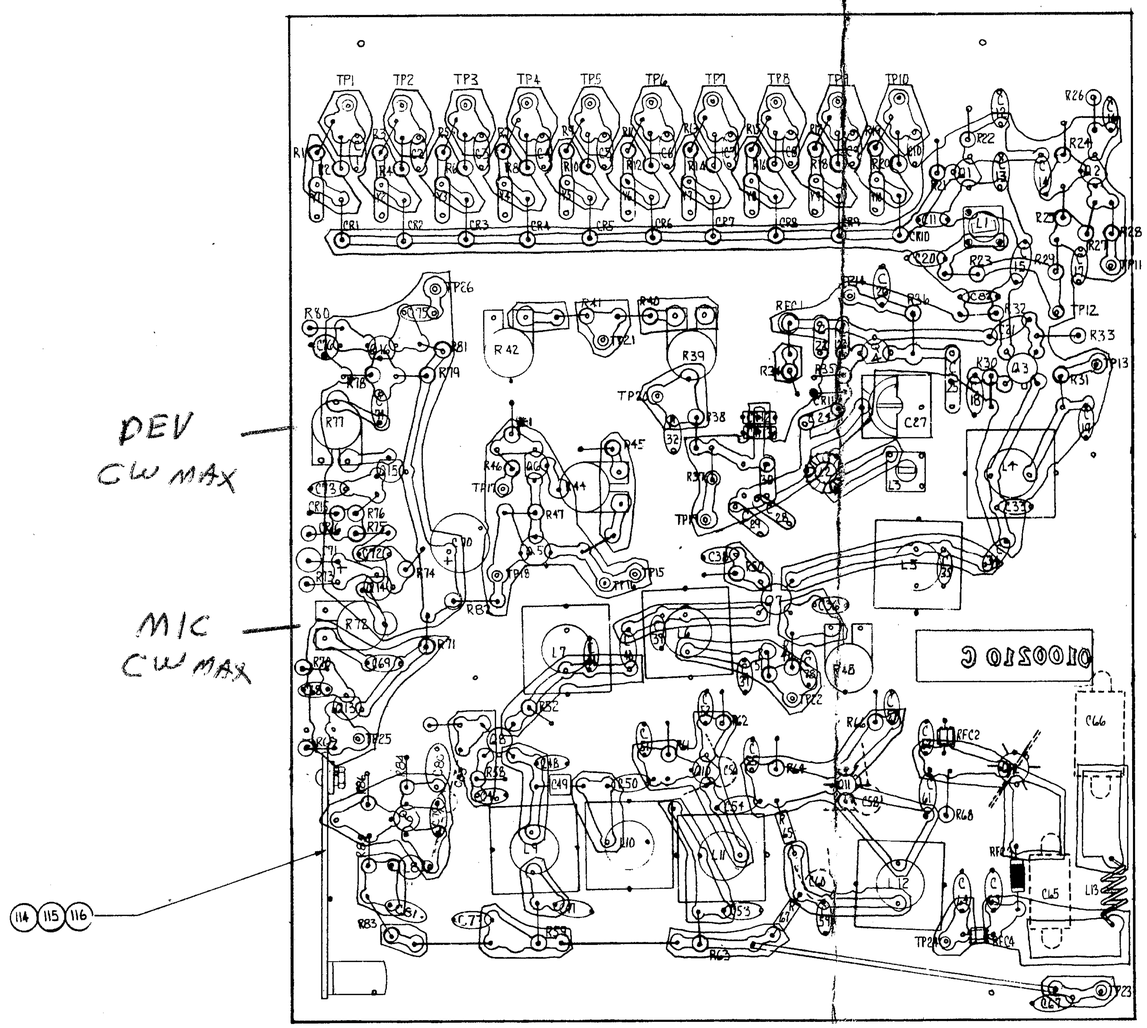

REV	DESCRIPTION	DATE	APPROVED
J	ADDED R87, R84 WAS 3.9K IS 1.5K	1-73	DLPY

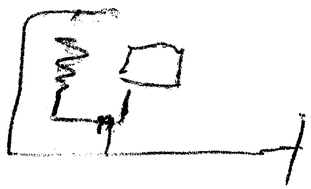

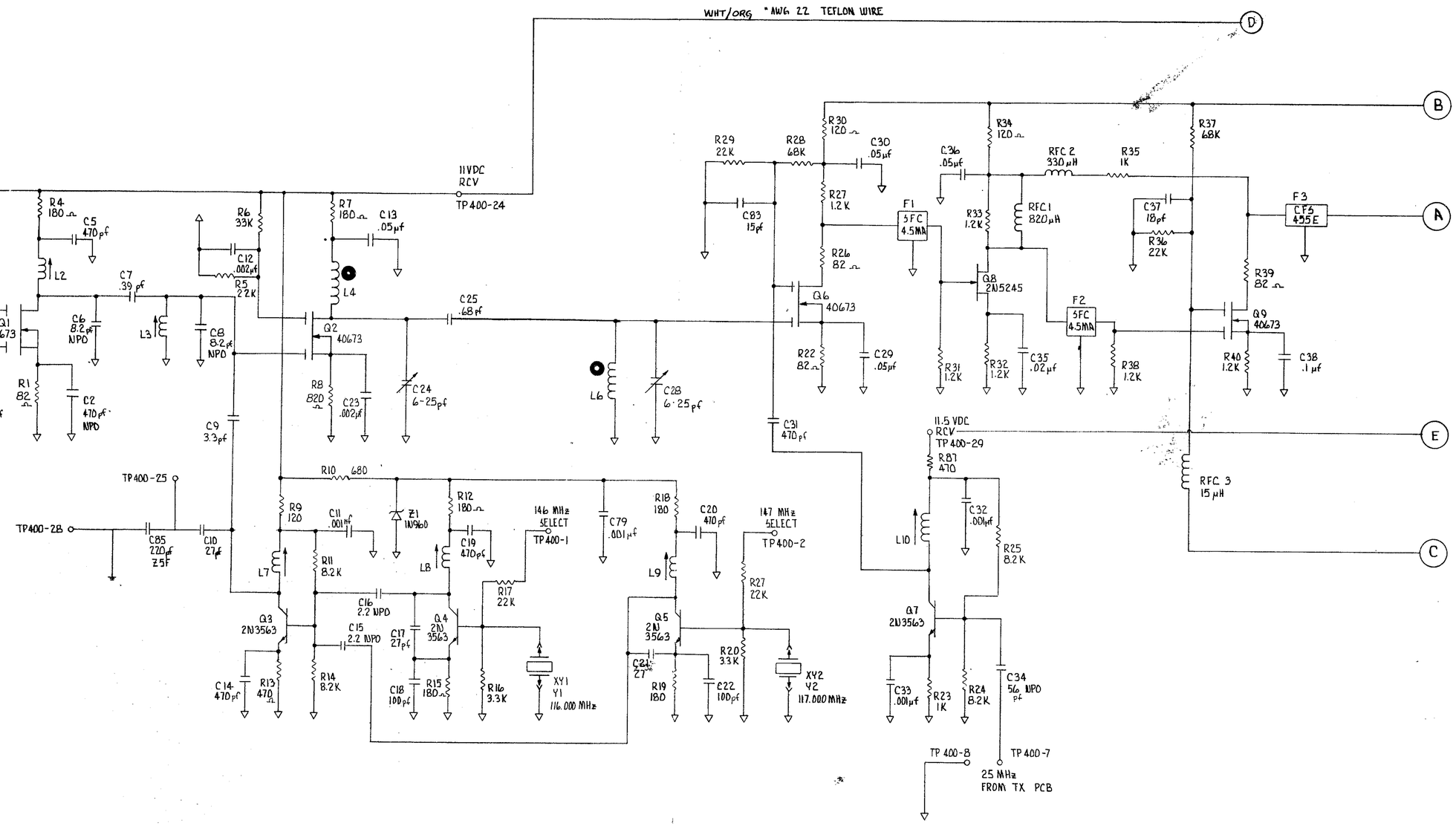

SHEET #1 OF 2

INTERNATIONAL SIGNAL AND CONTROL CORP.
BOX 389 R.D. #3 LITITZ, PA. 17543

SCALE: NONE	APPROVED BY JP Campbell	9/1/72	DRAWN BY LDF
DATE: 3:27:72			

SCHEMATIC DIAG. RCVR. BOARD FM-27

250th UNIT & UP

DRAWING NUMBER 0100455

REVISIONS			
LTR	DESCRIPTION	DATE	APPROVED
J	REFER SHT 1 OF 2	1-73	

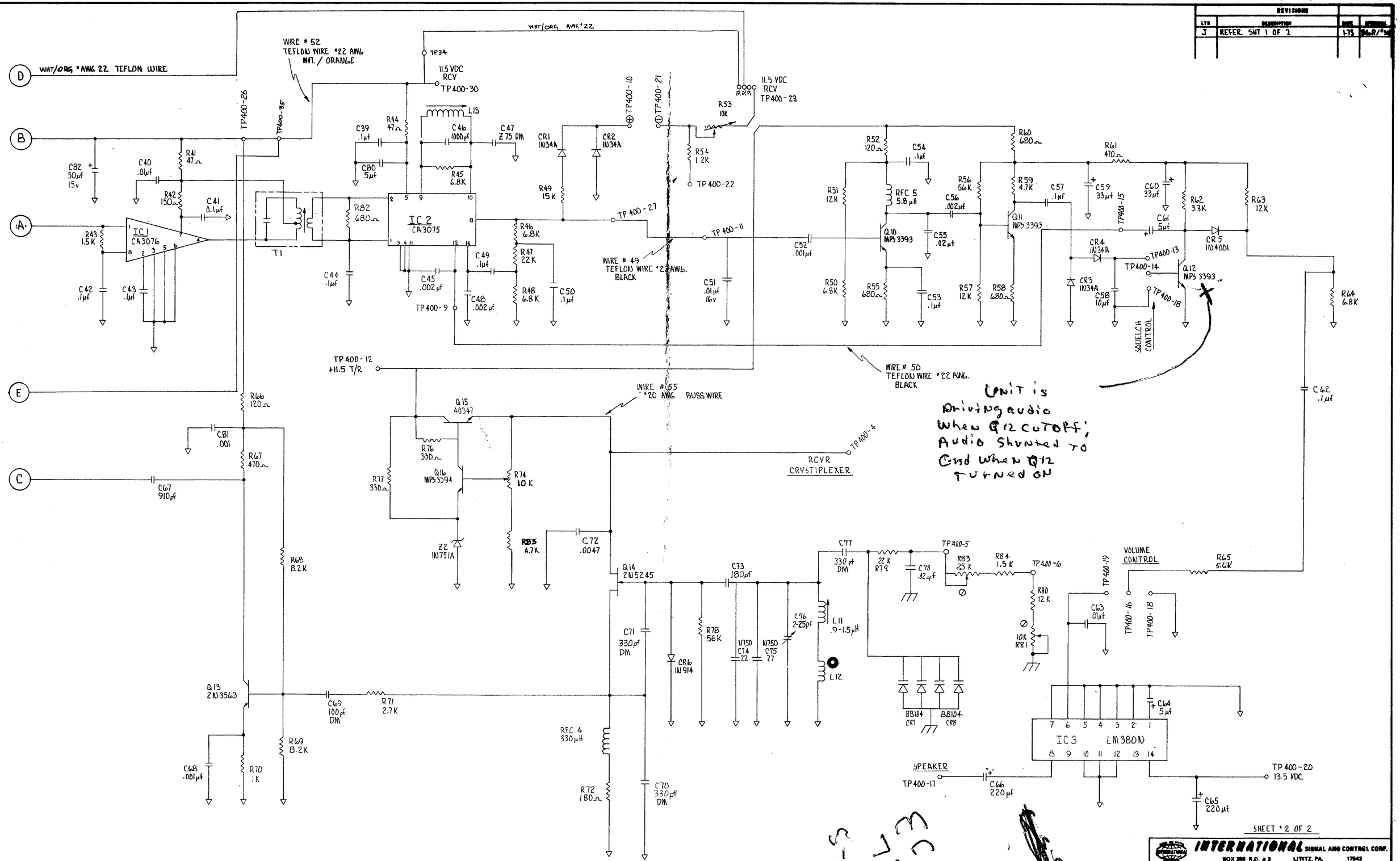

SHEET #2 OF 2

INTERNATIONAL SIGNAL AND CONTROL CORP.
BOX 286 R.D. #3 LITITZ, PA. 17543

SCALE: NONE
DATE: 3-27-72
APPROVED BY: J.P. Campbell 9/1/72
DRAWN BY: LDF

SCHEMATIC DIAG RCVR BOARD
FM-271

250 ⅝ UNIT & UP

DRAWING NUMBER 010455

REVISIONS			
LTR	DESCRIPTION	DATE	APPROVAL
I	INCORP ECO #317. R40 IS 1.5K WAS 3.9K	1-73	D.G.P.

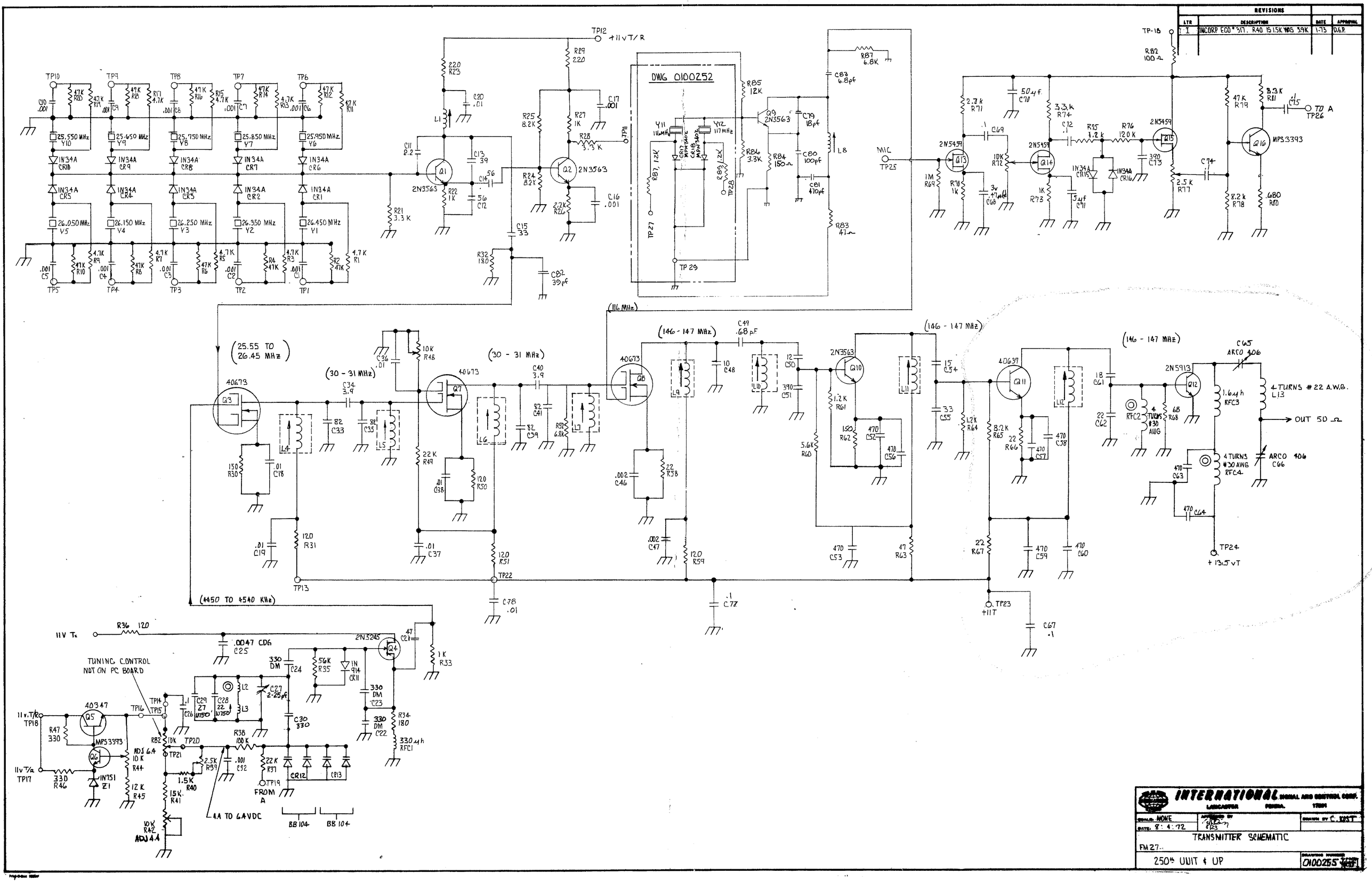

REVISIONS			
LTR	DESCRIPTION	DATE	APPROVAL
D	INCORP ECO #328 ADD TP28 & TP27	1-73	D.G.P.
E	INCORP ECO #340 ADD S105B	2-73	D.G.P

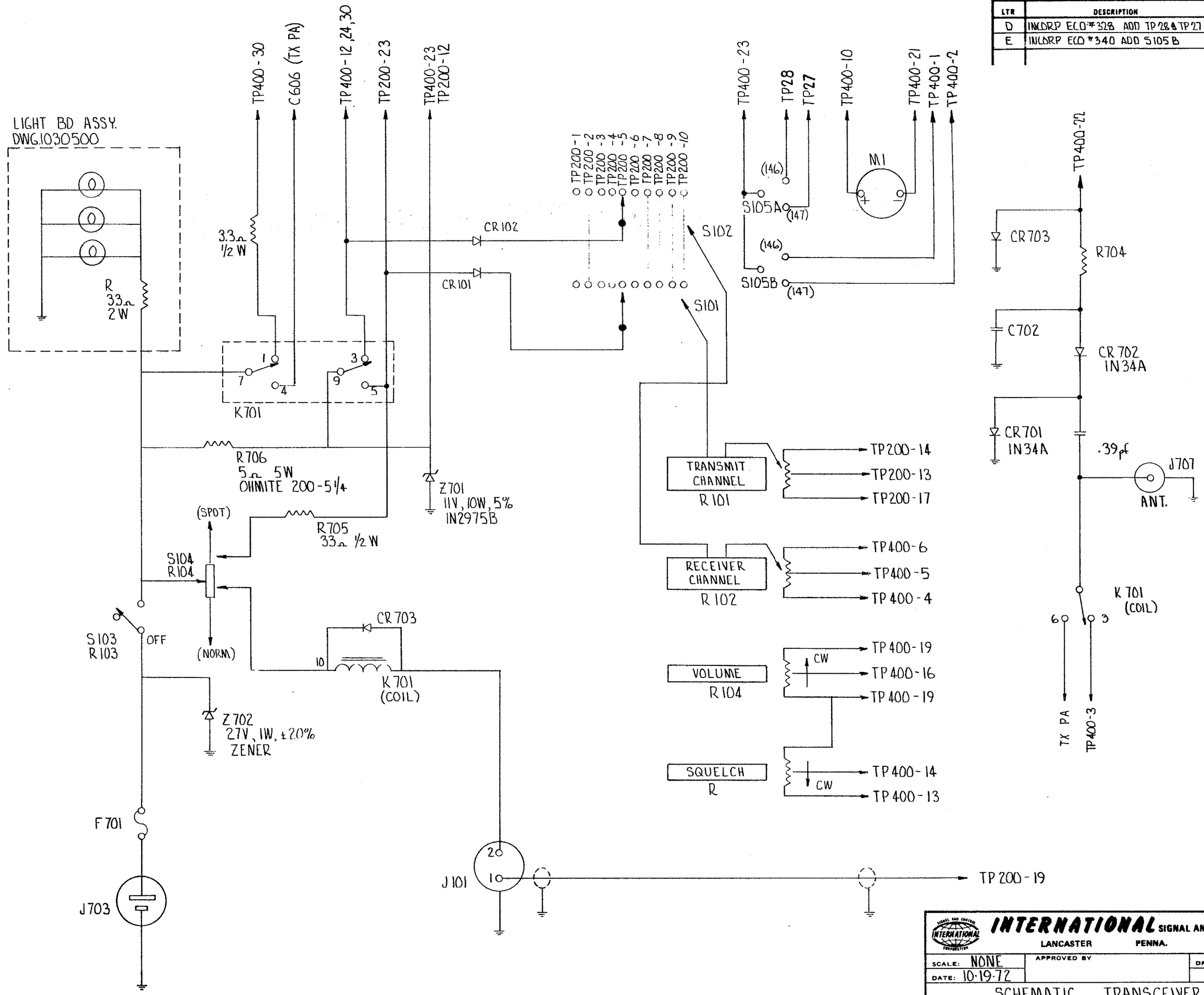

INTERNATIONAL SIGNAL AND CONTROL CORP.
LANCASTER PENNA. 17601

SCALE: NONE	APPROVED BY	DRAWN BY LDF
DATE: 10-19-72		

SCHEMATIC, TRANSCEIVER ASSY.

DRAWING NUMBER 0100005 E

Print-O-Stat 198MF

REVISIONS			
LTR	DESCRIPTION	DATE	APPROVAL
B	RELOCATED TP 29	12-72	
C	INCORP. ECO # 327 REVERSE Y11 & Y12	1-73	D.G.P

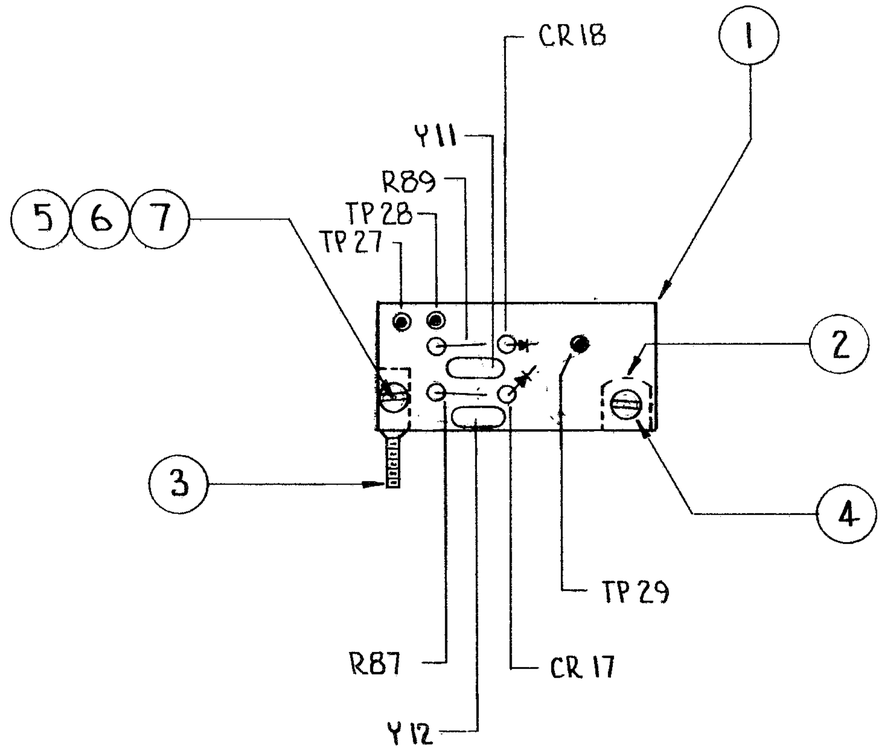

COMPONENT SIDE - FOIL SIDE SHOWN FOR CLARITY

INTERNATIONAL SIGNAL AND CONTROL CORP.
LANCASTER PENNA. 17601

SCALE: NONE	APPROVED BY	DRAWN BY LDF
DATE: 11·15·72	11-20-72	

XTAL. EXTENSION, P.C. BOARD ASSY

FM-27B TRANSMITTER ASSY.

DRAWING NUMBER 0100252C

Print-O-Stat 198MF