ICOM

SERVICE MANUAL

VHF/UHF
ALL MODE TRANSCEIVER

IC-821H

Icom Inc.

Downloaded from www.Manualslib.com manuals search engine

INTRODUCTION

This service manual describes the latest service information for the **IC-821H** VHF/UHF ALL MODE TRANSCEIVER at the time of publication.

VERSION NO.	VERSION	SYMBOL
#12	Europe	EUR-1
#13	U.S.A	USA-2
#14	Australia	AUS-1
#15	Sweden	SWE-1

To upgrade quality, any electrical or mechanical parts and internal circuits are subject to change without notice or obligation.

DANGER

NEVER connect the transceiver to an AC outlet or to a DC power supply that uses more than 16 V. This will ruin the transceiver.

DO NOT expose the transceiver to rain, snow or any liquids.

DO NOT reverse the polarities of the power supply when connecting the transceiver.

DO NOT apply an RF signal of more than 20 dBm (100 mW) to the antenna connector. This could damage the transceiver's front end.

ORDERING PARTS

Be sure to include the following four points when ordering replacement parts:

1. 10-digit order numbers
2. Component part number and name
3. Equipment model name and unit name
4. Quantity required

<SAMPLE ORDER>

1110000960	S.IC	NJM4558M	IC-821H	MAIN UNIT	5 pieces
8810009430	Screw	FH M3 x 6 ZK	IC-821H	Top cover	10 pieces

Addresses are provided on the inside back cover for your convenience.

REPAIR NOTES

1. Make sure a problem is internal before disassembling the transceiver.
2. **DO NOT** open the transceiver until the transceiver is disconnected from its power source.
3. **DO NOT** force any of the variable components. Turn them slowly and smoothly.
4. **DO NOT** short any circuits or electronic parts. An insulated tuning tool **MUST** be used for all adjustments.
5. **DO NOT** keep power ON for a long time when the transceiver is defective.
6. **DO NOT** transmit power into a signal generator or a sweep generator.
7. **ALWAYS** connect a 50 dB to 60 dB attenuator between the transceiver and a deviation meter or spectrum analyzer when using such test equipment.
8. **READ** the instructions of test equipment thoroughly before connecting equipment to the transceiver.

Downloaded from www.Manualslib.com manuals search engine

TABLE OF CONTENTS

SECTION 1 SPECIFICATIONS

SECTION 2 DISASSEMBLY INSTRUCTIONS

SECTION 3 INSIDE VIEWS

SECTION 4 CIRCUIT DESCRIPTION

4 - 1 RECEIVER CIRCUITS ..... 4 - 1
4 - 2 TRANSMITTER CIRCUITS ..... 4 - 4
4 - 3 PLL CIRCUITS ..... 4 - 6
4 - 4 POWER SUPPLY CIRCUITS ..... 4 - 7
4 - 5 PORT ALLOCATIONS ..... 4 - 7

SECTION 5 ADJUSTMENT PROCEDURES

5 - 1 PREPARATION BEFORE SERVICING ..... 5 - 1
5 - 2 PLL ADJUSTMENT ..... 5 - 2
5 - 3 FREQUENCY ADJUSTMENT ..... 5 - 2
5 - 4 RECEIVER ADJUSTMENT ..... 5 - 4
5 - 5 TRANSMITTER ADJUSTMENT ..... 5 - 8
5 - 6 METER AND SQUELCH ADJUSTMENT ..... 5 - 12
5 - 7 RF METER ADJUSTMENT ..... 5 - 13
5 - 8 METER REFERENCE ADJUSTMENT ..... 5 - 13

SECTION 6 PARTS LIST

SECTION 7 MECHANICAL PARTS

SECTION 8 SEMI-CONDUCTOR INFORMATION

SECTION 9 BOARD LAYOUTS

9 - 1 FRONT ..... 9 - 1
9 - 2 MAIN UNIT ..... 9 - 4
9 - 3 PLL UNIT ..... 9 - 6
9 - 4 PA-A AND PA-B UNITS ..... 9 - 7
9 - 5 RF-A AND RF-B UNITS ..... 9 - 8

SECTION 10 BLOCK DIAGRAM

SECTION 11 VOLTAGE DIAGRAM

Downloaded from www.Manualslib.com manuals search engine

SECTION 1 SPECIFICATIONS

GENERAL

- Frequency coverage:

Version	144 MHz band	440 MHz band
U.S.A	Rx: 136.0–174.0 MHz* Tx: 144.0–148.0 MHz	430.0–450.0 MHz
Europe	144.0–146.0 MHz	430.0–440.0 MHz
Australia	144.0–148.0 MHz	430.0–450.0 MHz
Sweden	144.0–146.0 MHz	432.0 –438.0 MHz

*Guaranteed frequency range is 144.0–148.0 MHz

- Mode : SSB (J3E), CW (A1A), FM (F3E)
- Number of memory channels : 160 (80 channels for each band)
- Antenna connector : VHF SO-239 (50 Ω)
  UHF Type-N (50 Ω)
- Usable temperature range: −10 ℃ to +60 ℃; +14 ℉ to +140 ℉
- Frequency stability : ±3 ppm (−10 ℃ to +60 ℃)
- Tuning steps : SSB, CW 1, 10, 50 or 100 Hz
  FM 0.1, 5, 10, 12.5, 20, 25 or 100 kHz
- Power supply requirement : 13.8 V ±15 % (negative ground)
- Current drain (at 13.8 V) : Transmit Max. power 16.0 A
  Receive Stand-by 2.0 A
  Max. audio 2.5 A
- Dimensions : 241 (W) × 94 (H) × 239 (D) mm
  9.5 (W) × 3.7 (H) × 9.4 (D) in
  (projections not included)
- Weight : 5.0 kg; 11.0 lb

TRANSMITTER

- Output power : 144 MHz SSB 6–35 W
  FM, CW 6–45 W
  440 MHz SSB 6–30 W
  FM, CW 6–40 W
  (continuously adjustable)
- Modulation system : SSB Balanced modulation
  FM Variable reactance mod.
- Suprious emission : Less than −60 dB
- Carrier suppression: More than 40 dB
- Unwanted sideband: More than 40 dB
- Microphone connector : 8-pin connector (600 Ω)
- Key connector : 3-conductor 3.5 (d) mm (1/8")

RECEIVER

- Receive system
  144 MHz band
  SSB, CW Single conversion superheterodyne
  FM Double conversion superheterodyne
  440 MHz band
  SSB, CW Double conversion superheterodyne
  FM Triple conversion superheterodyne
- Intermediate frequencies (unit: MHz)

	MODE	MAIN BAND			SUB BAND		
		1st	2nd	3rd	1st	2nd	3rd
VHF	SSB	10.8500	—	—	10.9500	—	—
	CW	10.8491	—	—	10.9491	—	—
	FM	10.8500	0.4550	—	10.9500	0.4550	—
UHF	SSB	71.2500	10.8500	—	71.3500	10.9500	—
	CW	71.2491	10.8491	—	71.3491	10.9491	—
	FM	71.2500	10.8500	0.4550	71.3500	10.9500	0.4550

- Sensitivity (both VHF and UHF bands)
  SSB, CW 0.11 μV for 10 dB S/N
  FM 0.18 μV for 12 dB SINAD
- Squelch sensitivity (both VHF and UHF bands)
  SSB, CW Threshold Less than 1.0 μV
  Tight Less than 3.2 mV
  FM Threshold Less than 0.1 μV
  Tight Less than 3.2 mV
- Selectivity
  SSB, CW More than 2.3 kHz/−6 dB
  Less than 4.2 kHz/−60 dB
  CW narrow (optional) More than 0.5 kHz/−6 dB
  Less than 1.34 kHz/−60 dB
  FM More than 15.0 kHz/−6 dB
  Less than 30.0 kHz/−60 dB
- Spurious and image rejection ratio: More than 60 dB
- Audio output power (at 13.8 V DC): More than 2.0 W at 10 % distortion with an 8 Ω load
- IF shift variable range : More than ±1.2 kHz
- RIT variable range :
  SSB, CW More than ±1.0 kHz
  FM More than ±5.0 kHz
- External speaker connector : 2-conductor 3.5 (d) mm (1/8") / 8 Ω × 2 (for MAIN and SUB bands)

All stated specifications are subject to change without notice or obligation.

Downloaded from www.Manualslib.com manuals search engine

SECTION 2 DISASSEMBLY INSTRUCTIONS

• Opening the transceiver's case

① Unscrew 8 screws from the transceiver's top and 4 screws from the sides, then remove the top cover.

② Turn the transceiver upside down.

③ Unscrew 4 screws from the bottom cover, then remove the bottom cover.

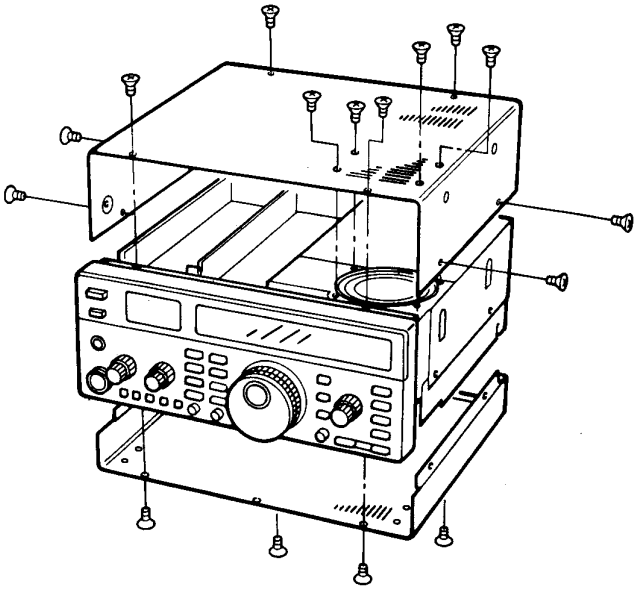

• Opening the inside chassis

① Remove the top and bottom covers as shown above.

② Loosen the gutter screw on each side of the front panel's rear side.

③ Unscrew 1 screw from each side of the front panel's rear side.

④ Pull the front panel forward as shown by the arrow at right.

⑤ Loosen 1 flat head screw each side of the MAIN unit chassis.

⑥ Unscrew 2 silver screws from the rear panel.

⑦ Lift and pivoted the MAIN unit chassis to the vertical position, and tighten the screws (labelled ⑤) to secure the chassis.

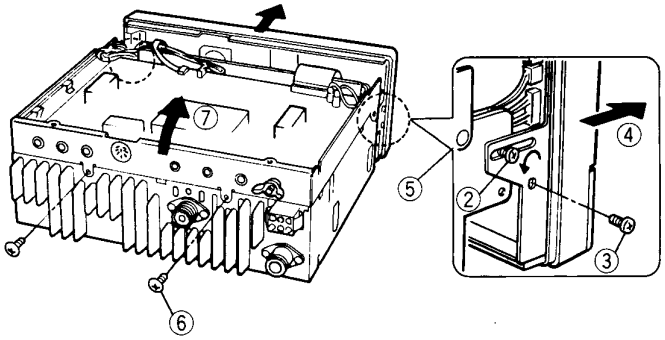

• Removing the PA-A unit

① Opening the inside chassis as previous instructions.

② Unscrew 8 silver screws ②, then remove the PA-A cover.

③ Unsolder 3 points ③.

④ Unscrew 2 screws ④.

⑤ Unscrew 6 silver screws ⑤, then remove the PA-A unit.

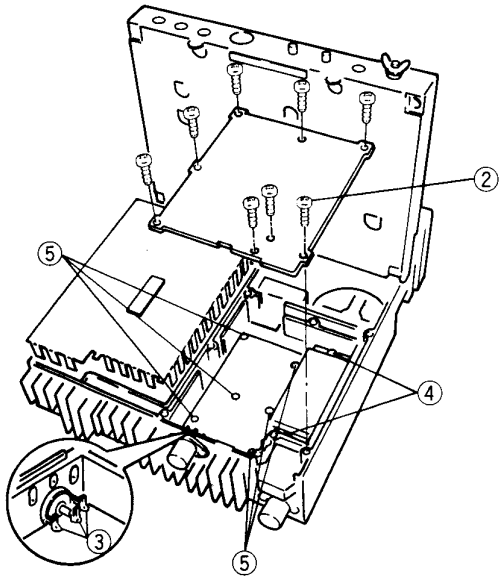

• Removing the PA-B unit

① Remove the top cover.

② Unscrew 8 silver screws ②, then remove the PA-B cover.

③ Unsolder 3 points ③.

④ Unscrew 2 screws ④.

⑤ Unscrew 2 screws ⑤.

⑥ Unscrew 8 silver screws ⑥, then remove the PA-B unit.

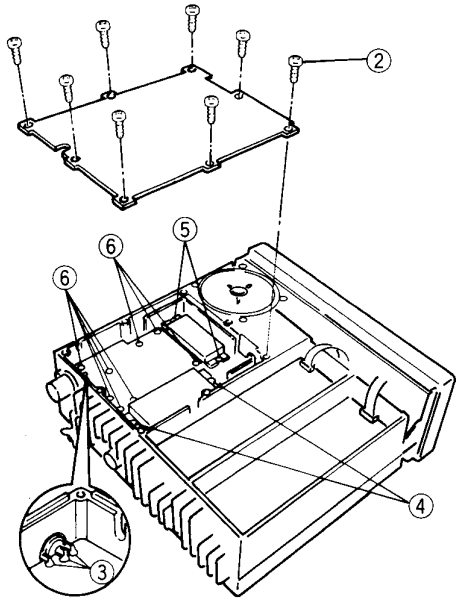

Downloaded from www.Manualslib.com manuals search engine

SECTION 3 INSIDE VIEWS

• MAIN UNIT

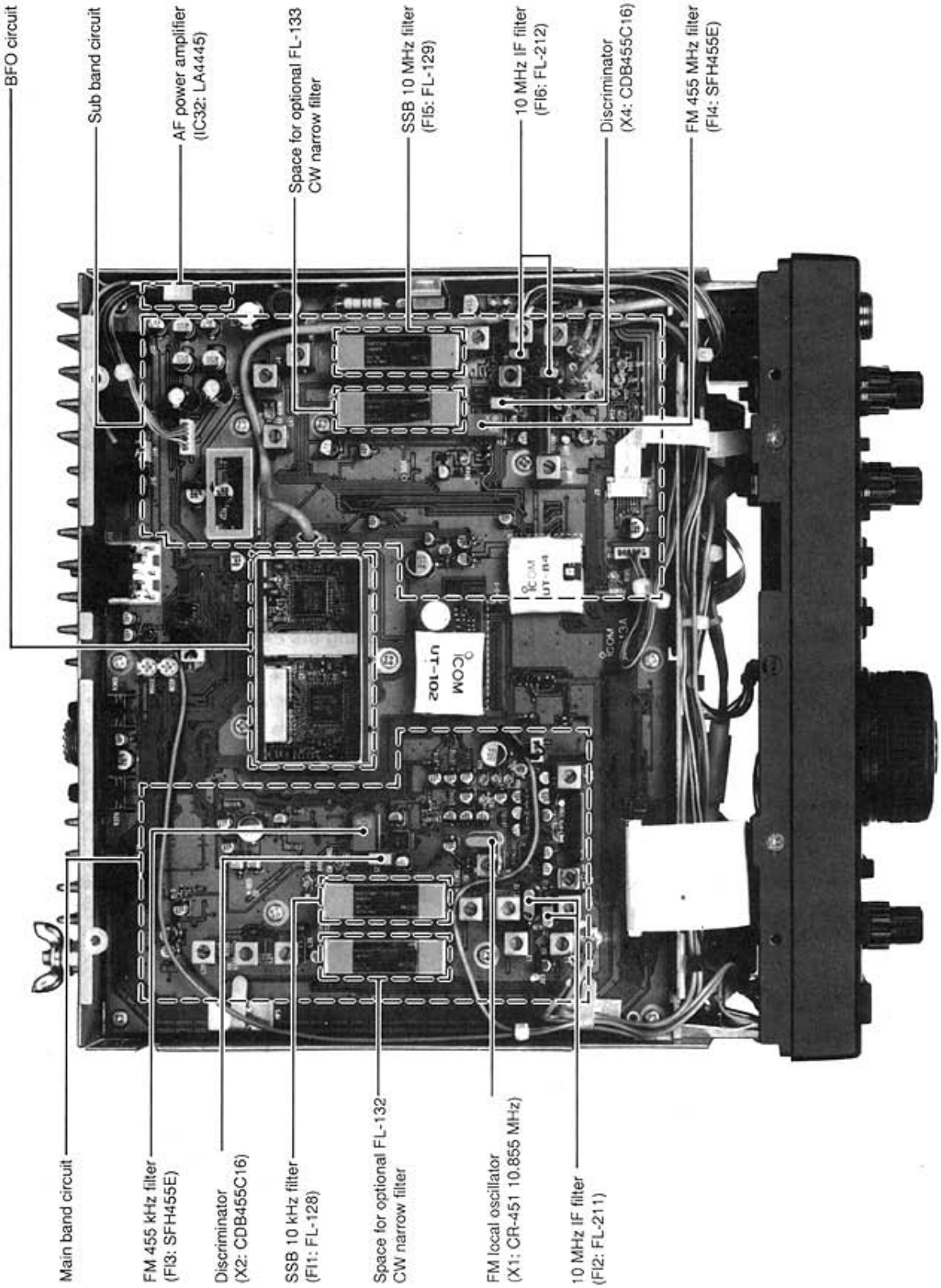

Downloaded from www.Manualslib.com manuals search engine

• RF-A, RF-B AND PA-B UNITS

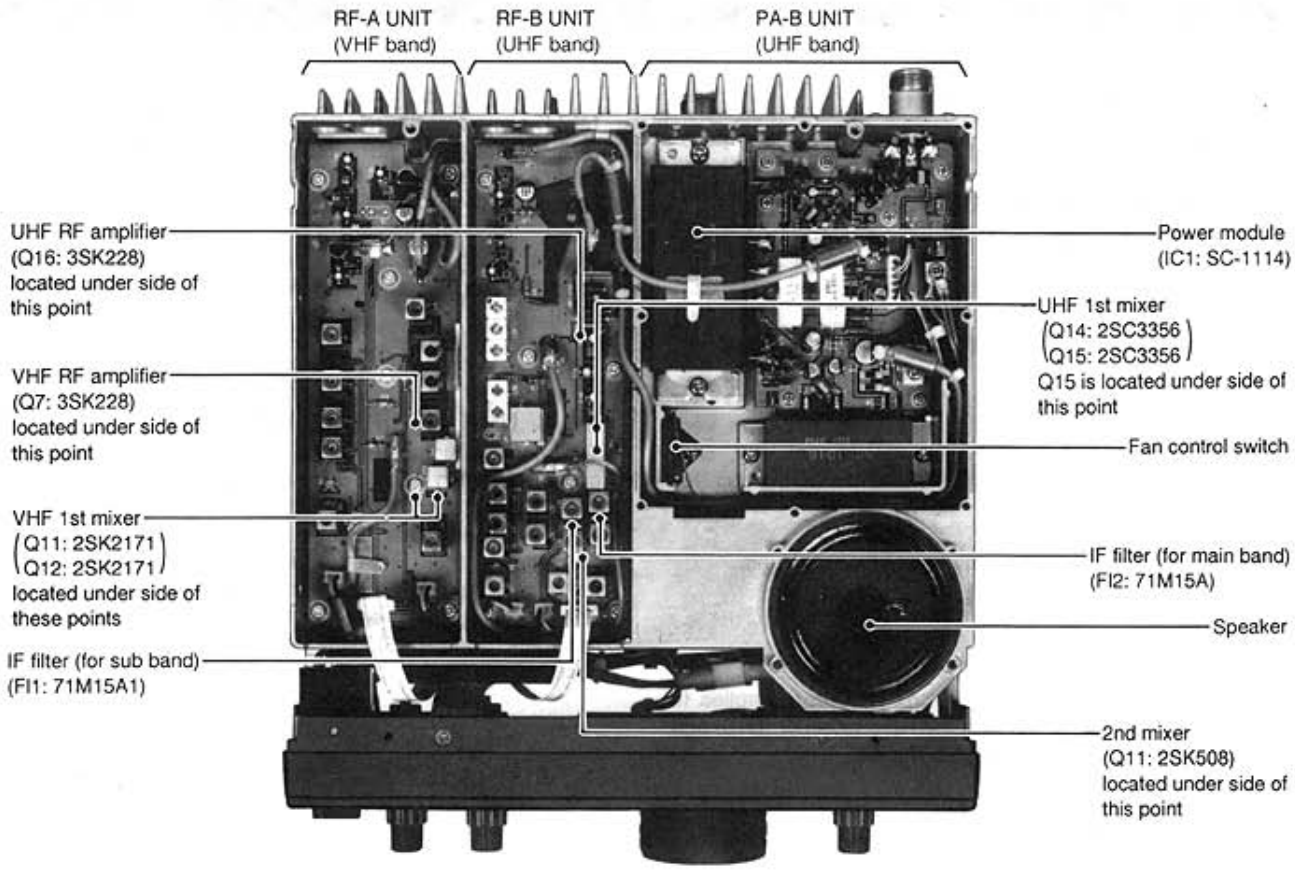

• PA-A AND PLL UNITS

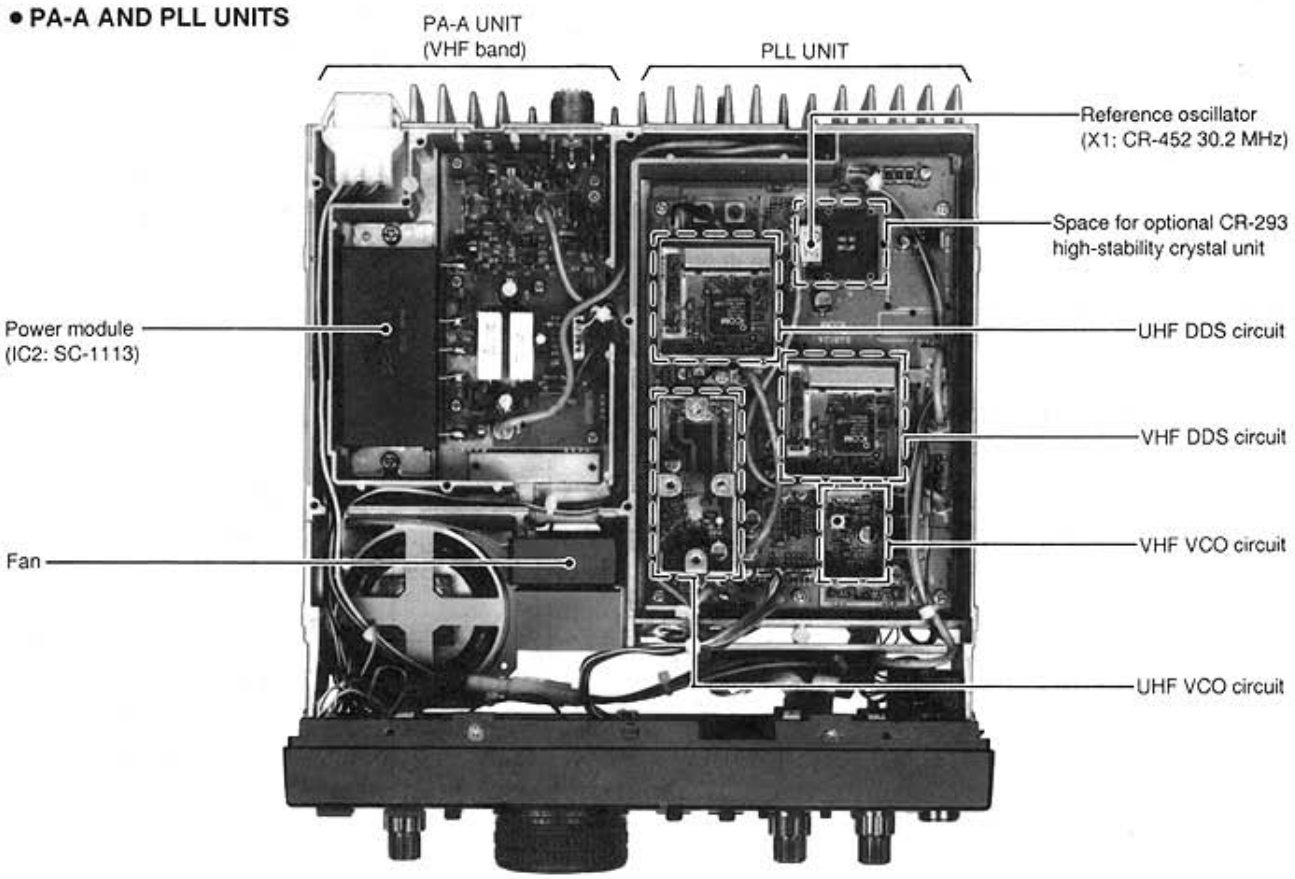

Downloaded from www.Manualslib.com manuals search engine

SECTION 4 CIRCUIT DESCRIPTION

4-1 RECEIVER CIRCUIT

Note: [Main]=Main band, [Sub]=Sub band

4-1-1 VHF ANTENNA SWITCHING CIRCUIT (PA-A UNIT)

Received signals from the antenna connector (J2) are passed through the low-pass filter (L3–L5, C5–C8) then applied to the antenna switching circuit (D1–D3, L6, L7).

The antenna switching circuit functions as a low-pass filter while receiving. However, its impedance becomes very high while transmitting by turning ON diodes (D2, D3). Thus transmit signals are blocked from entering the receiver circuits.

The passed signals are then applied to the RF-A unit.

4-1-2 VHF RF CIRCUIT (RF-A UNIT)

Received signals from the PA-A unit via J6 are applied to the RF amplifier circuit (Q7) via the RF attenuator (D15) and tunable bandpass filter (D13, L16) circuits.

The amplified signals are then passed through the another tunable bandpass filter circuit (D10–D12, L13–L15) to suppress unwanted signals. The filtered signals are then applied to the 1st mixer circuit (Q11, Q12).

Varactor diodes (D10–D13) are used for the bandpass filters to tune the center frequency for wide bandwidth receiving and good image response rejection. PLL lock voltages are applied to these diodes for tuning.

4-1-3 VHF 1ST MIXER CIRCUIT (RF-A UNIT)

The 1st mixer circuit converts the received signals to a fixed frequency of the 10 MHz IF signal with a PLL output frequency. By changing the PLL frequency, only the desired frequency will be passed through a pair of crystal filters at the next stage of the VHF 1st mixer.

The filtered signals from the bandpass filter are mixed with 1st LO signals at the mixer circuit (Q11, Q12) to produce a 1st IF signal (10.85 MHz [Main] or 10.95 MHz [Sub]). The 1st LO signals are the PLL output frequency which comes from the VHF VCO circuit (PLL unit, Q1, D1–D3, D8).

The 1st IF signal is then applied to either the Main or Sub band 10 MHz IF circuit in the MAIN unit via P1 [Main] or P2 [Sub].

4-1-4 UHF RF CIRCUIT (RF-B UNIT)

The received signals from the UHF antenna connector are passed through the low-pass filter (PA-B unit, L3–L5, C5–C10) and then the antenna switching circuit (PA-B unit, D1–D3). The signals from the antenna switching circuit are then applied to the RF amplifier circuit (Q16) via the tunable bandpass filter (D14, L35) and RF attenuator circuit (D16). The amplified signals are passed through the tunable bandpass filter (D11–D13), and then applied to the 1st mixer circuit (Q14, Q15).

4-1-5 UHF 1ST AND 2ND MIXER CIRCUIT (RF-B UNIT)

The filtered RF signals from the bandpass filter are mixed with a 1st LO signal at the 1st mixer circuit (Q14, Q15) to produce a 1st IF signal (71.25 MHz [Main] or 71.35 MHz [Sub]). The 1st IF signal is passed through a crystal filter (FI2 [Main], FI1 [Sub]) to suppress out-of-band signals. The filtered IF signal is then applied to the 2nd mixer circuit (Q11) to produce a 10 MHz IF signal with a 2nd LO signal. The IF signal is then applied to the MAIN unit via P1 [Main] or P2 [Sub].

The 1st LO signal is generated at the UHF VCO circuit (PLL unit, Q5, D4, D10), and the multiplied reference signal is used for the 2nd LO signal.

• **RECEIVER CONSTRUCTION**

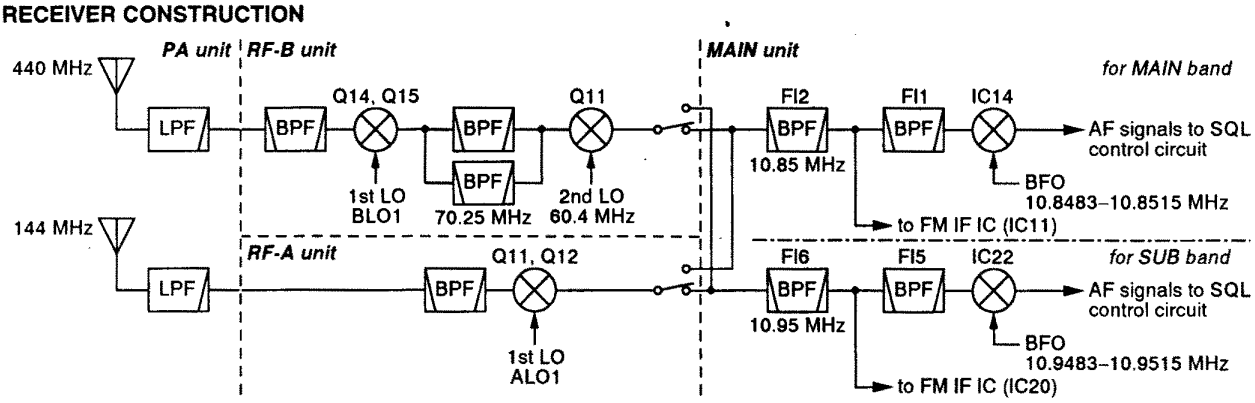

Downloaded from www.Manualslib.com manuals search engine

4-1-6 10 MHz IF CIRCUIT (MAIN UNIT)

The 10 MHz IF signal from the mixer circuit is passed through the bandpass filter (FI2 [Main], FI6 [Sub]) to suppress out-of-band signals. The filtered signal is amplified at the IF amplifier (Q13 [Main], Q98 [Sub]). The IF amplifier provides 20 dB gain.

The amplified signal is then applied to different circuits depending on the selected mode.

(1) FM mode

The signal is applied to an FM IF IC pin 16 (IC11 [Main] or IC20 [Sub]).

(2) SSB and CW mode

The signal is passed through a 10 MHz IF filter (FI1/10.85 MHz [Main] or FI5/10.95 MHz [Sub]) or optional CW narrow filters. The filtered signal is amplified at the IF amplifiers (Q60–Q62 [Main] or Q77, Q100, Q101 [Sub]) and then applied to a demodulator circuit.

4-1-7 DEMODULATOR CIRCUIT (MAIN UNIT)

(1) FM mode

The 10 MHz IF signal from an IF amplifier (Q13 [Main] or Q98 [Sub]) is applied to the mixer section of the FM IF IC (IC11 [Main], IC20 [Sub], pin 16) and is mixed with a LO signal (10.395 MHz [Main], 10.495 MHz [Sub]) to produce a 455 kHz IF signal. The LO signal is generated by the BFO circuit (IC101 [Main], IC103 [Sub])

The FM detector circuit employs the quadrature detection method, which uses a ceramic discriminator (X2 [Main], X4 [Sub]) for phase delay to obtain a non-adjusting circuit.

The detected signals are output from pin 9, and applied to the squelch control and center indication detector circuits, etc.

(2) SSB and CW modes

The amplified signal from the IF amplifier circuit (Q62 [Main], Q101 [Sub]) is applied to the balanced mixer circuit (IC14 [Main], IC22 [Sub]) to demodulate into AF signals. Demodulated audio signals are output from pin 3, and applied to the squelch control gate (IC16 [Main], IC28 [Sub]).

BFO circuits (IC101 [Main] and IC103 [Sub]) generate BFO signals for use in the balanced mixers.

• **BFO frequencies**

Mode	for MAIN band	for SUB band
USB	10.8485 MHz	10.9485 MHz
LSB	10.8515 MHz	10.9515 MHz
CW	10.8483 MHz	10.9483 MHz

4-1-8 SQUELCH CONTROL CIRCUIT (MAIN UNIT)

The demodulated AF signals from the balanced mixer circuit or FM IF IC are applied to the squelch control gate (IC16 [Main], IC28 [Sub]). This consists of 4 analog switches which are selected with a mode signal and squelch control signal from the CPU (DISPLAY unit, IC1) via the expander IC (IC8 [Main], IC24 [Sub]). The switched AF signals are applied to the AF circuit.

4-1-9 SQUELCH CIRCUIT (MAIN UNIT)

(1) FM mode

A squelch circuit cuts out AF signals when no RF signal is received or the S-meter signal is lower than the [SQL] control setting level. By detecting noise components in the AF signals, the CPU switches the squelch control gate.

Some noise components in the AF signals from pin 9 of the FM IF IC (IC11 [Main], IC20 [Sub]) are applied to the active filter section (pin 10) of the FM IF IC. The filtered noise components are output from pin 11, and then applied to the noise detector circuit (D35 [Main], D55 [Sub]) for conversion into DC voltages. The voltages are then applied to the buffer-amplifier (IC116 [Main], IC118 [Sub]).

The buffer-amplified DC voltages are applied to the CPU (DISPLAY unit, IC1) via the ADMNO [Main]/ADSNO [Sub] line. The [SQL] level signal is also applied to the CPU via the gate control circuit (DISPLAY unit, IC11) as a reference voltage for comparison with the noise signals. Also, an S-meter signal is applied to the CPU from FM IF IC pin 13 (IC11 [Main], IC20 [Sub] via the meter amplifier (IC15a [Main], IC23b [Sub]). The CPU compares these signals, then outputs a control signal to the squelch control gate.

• **AF circuit**

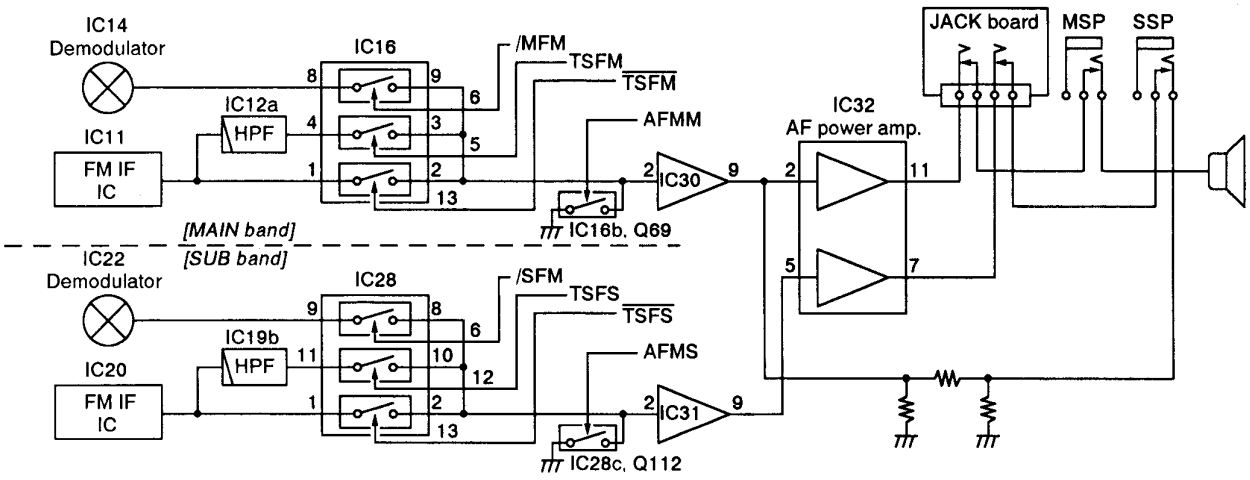

Downloaded from www.Manualslib.com manuals search engine

(2) SSB and CW modes

The squelch circuit mutes audio output when the S-meter signal is lower than the [SQL] control setting level.

A portion of the 10 MHz IF signal from the IF amplifier (Q62 [Main], Q101 [Sub]) is converted into DC voltage at the AGC detector (D44, Q65 [Main], D73, Q104 [Sub]) and meter amplifier (IC15b [Main] or IC23a [Sub]). The amplified signal is applied to the CPU (DISPLAY unit, IC1) via the ADMSM [Main]/ADSSM [Sub] line. The CPU outputs control signals to the squelch control gate when the S-meter signal is low level.

4-1-10 AF AMPLIFIER CIRCUIT (MAIN UNIT)

The AF amplifier circuit amplifies the demodulated signals to drive a speaker. For the separate speaker function, a stereo power amplifier is used.

AF signals from the squelch control gate are amplified at the voltage controlled amplifier (VCA; IC30 [Main], IC31 [Sub]) which functions as a volume control using the [AF] control signal. The amplified AF signals are applied to the AF power amplifier circuit (IC32, pin 2 [Main], pin 5 [Sub]).

The amplified audio signals of SUB band are output from from pin 7, and are applied to the external speaker jack for the SUB band (J17) via the [PHONE] jack (JACK board, J1). When no plug is connected to the jack, the signals are fed back to the MAIN band audio input (IC32, pin 2) and combined with the MAIN band audio. The mixed audio is applied to the internal speaker via the [PHONE] jack and external speaker jack for the MAIN band (J16).

4-1-11 NOISE BLANKER CIRCUIT (MAIN UNIT)

The noise blanker circuit detects pulse-type noises, and stops IF amplifier operation during detection.

A portion of the 10 MHz IF signal from the bandpass filter (FI2 [Main], FI6 [Sub]) is amplified at the noise amplifier circuit (Q7, IC6, Q9 [Main], Q252, IC119, Q254 [Sub]). The amplified signal is rectified at the noise detector circuit for conversion into DC voltage. The DC voltage is amplified at the DC amplifier circuit (Q11, Q12 [Main], Q256, Q257 [Sub]) and then applied to the noise blanker control circuit (Q14 [Main], Q212 [Sub]) to stop amplification of the IF amplifier circuit (Q13 [Main], Q98 [Sub]).

Some DC voltage is fed back to the noise amplifier circuit (IC6 [Main], IC116 [Sub]) via the DC amplifiers (Q8, Q10 [Main], Q253, Q255 [Sub]). The DC amplifiers function as an AGC circuit to reduce averaged noise. Therefore, the noise blanker function shuts off pulse-type noise only.

4-1-12 AGC CIRCUIT (MAIN UNIT)

The AGC (Auto Gain Control) circuit reduces IF amplifier gain to keep the audio output at a constant level.

A portion of the 10 MHz IF signal from the IF amplifier (Q62 [Main], Q101 [Sub]) is applied to the AGC detector circuit (D44 [Main], D73 [Sub]). The detected signal is then amplified at the DC amplifier circuit (Q65 [Main], Q104 [Sub]) and then applied to the IF amplifiers (Q13, Q61, Q62 [Main], Q98, Q100, Q101 [Sub]).

When strong signals are received, the detected voltage increases and the output level of the DC amplifier, as AGC voltage, decreases. The AGC voltage is used for the bias voltage for the IF amplifiers, therefore, the IF amplifier gain is decreased.

AGC response time is controlled by changing the time constant at the AGC control line with a resistor (R276 [Main], R432 [Sub]) and capacitors (C206, C210 [Main], C381, C385 [Sub]). These are connected to the AGC control line while AGC is set to slow. However, R276 and C210 [Main]/R432 and C385 are disconnected from the AGC control line while AGC is set to fast, due to Q67 and Q68 [Main]/Q105 and Q210 [Sub] being switched OFF. Also, C206 [Main]/C381 [Sub] is disconnected from the AGC control line due to Q54 and Q55 [Main]/Q206 and Q207 being switched OFF while scanning for faster response than AGC fast mode.

• AGC and Noise Blanker circuits

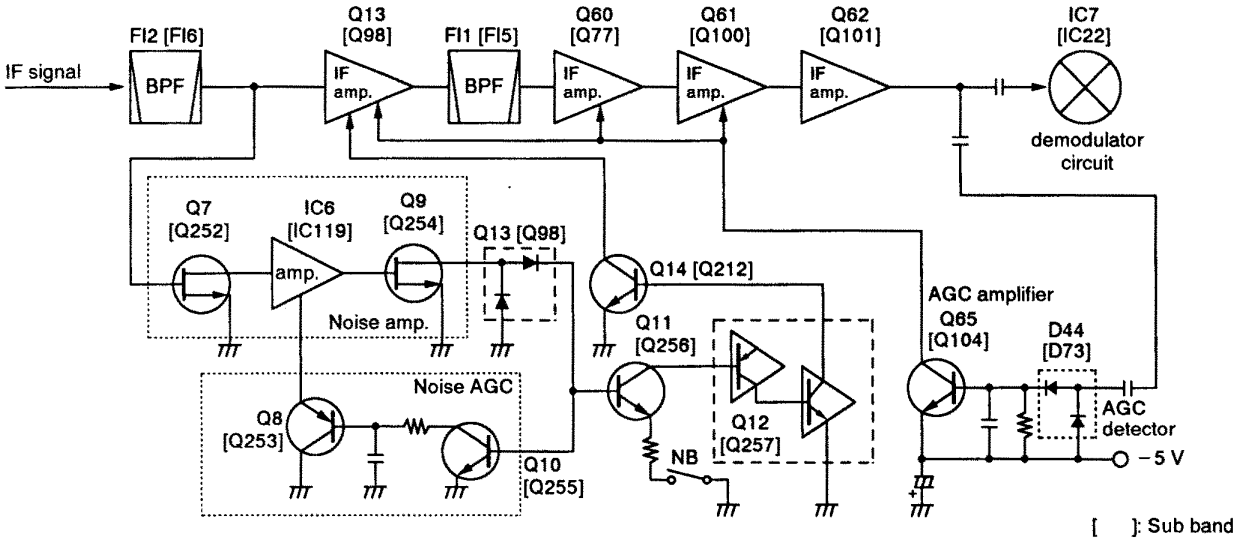

Downloaded from www.Manualslib.com manuals search engine

4-1-13 S-METER CIRCUIT (MAIN UNIT)

The S-meter circuit indicates the relative received signal strength while receiving and changes depending on the received signal strength.

(1) FM mode

Some of the amplified IF signal is applied to the S-meter detector section in the FM IF IC (IC11 [Main], IC20 [Sub]) to be converted into DC voltage. The converted signal is output from pin 13 and applied to the meter amplifier circuit (IC15a [Main], IC23b [Sub]). The amplified signal is then applied to the CPU (DISPLAY unit, IC1) via the ADMSM [Main]/ADSSM [Sub] line. The CPU then outputs S-meter drive signals as a METO signal.

(2) SSB and CW modes

A portion of the AGC control signal is applied to the S-meter amplifier. The amplified signal is then applied to the CPU to drive the S-meter.

4-2 TRANSMITTER CIRCUITS

4-2-1 MICROPHONE AMPLIFIER CIRCUIT (DISPLAY AND MAIN UNITS)

The microphone amplifier circuit amplifies audio signals from the microphone or ACC connector and then applies them to the modulation circuit. One microphone amplifier circuit is commonly used for both FM/SSB and VHF/UHF.

Audio signals from the microphone are amplified at the variable controlled amplifier (VCA; DISPLAY unit, IC3) where the amplifier gain is controlled with the [MIC] control setting.

The mic limiter circuit (D29) activates when the [COMP] switch is turned ON to limit VCA output. The amplifier gain is also controlled with the [COMP LEVEL] control in such cases. The amplified audio signals are then applied to the other microphone amplifier circuit (IC2a) in the MAIN unit. Audio signals from the ACC connector is amplified at IC2b. These amplified signals from IC2a or IC2b are applied to the IDC or the balanced mixer circuit depending on operating mode.

4-2-2 MODULATION CIRCUIT (MAIN UNIT)

(1) FM mode

The amplified audio signals from IC2a are pre-emphasized and limited at IC1b and then passed through the splatter filter (IC1a). The filtered signals are then applied to the FM modulation circuit (D22) via the FM deviation adjustment pot (R29). Also, subaudible tone signals from the BFO circuit (IC101) are applied to the FM modulation circuit via the tone deviation adjustment pot (R64).

The FM modulation circuit changes the generating frequency of the FM local oscillator (Q17, X1) to generate an FM signal. The modulated IF signal is passed through the transmit gain control pot (R136) and then applied to the transmit IF amplifier circuit.

When 9600 bps mode is selected, audio signals from the ACC connector bypass the amplifiers and are applied to Q4 directly via the external modulation switch (MAIN unit, IC114, pins 1, 7). In such cases, the modulation limiter (IC17) cuts off the audio line when overmodulation is detected.

(2) SSB mode (MAIN unit)

The amplified audio signals from IC2a are mixed with BFO signals at the balanced mixer circuit (IC7) to produce a 10 MHz IF signal. The mixed signal is still a DSB signal, therefore, the mixed signal passes through bandpass filter circuit (FI1) to suppress unwanted side band signals. The filtered signal is applied to the transmit IF amplifier circuit.

Mode	Transmit IF signal
USB	10.8485 MHz
LSB	10.8515 MHz
CW	10.8491 MHz

4-2-3 CW KEYING CIRCUIT (MAIN UNIT)

Keying signals (EDOT and EDSH) from the [KEY] jack (J19) are applied to the CPU (DISPLAY unit, IC1), and the CPU outputs an EKEY signal to the CW break-in circuit (Q234, Q84). The signal output from the CW break-in circuit is applied to the BFO mute switches (D120, D121) to cut the BFO signal line while releasing. While keying, BFO signals are applied to the balanced mixer, and a DC bias voltage is applied to leak carrier signals.

• SIGNAL CONSTRUCTIONS IN SATELLITE MODE

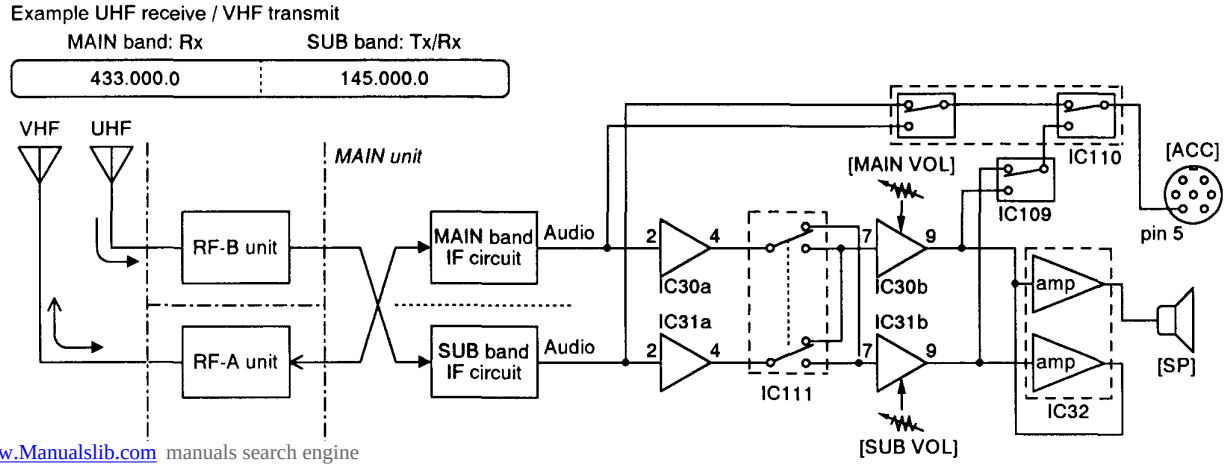

Downloaded from www.Manualslib.com manuals search engine

The output signal from the CW break-in circuit is also applied to the CW side-tone generator circuit (Q80, Q81).

4-2-4 TRANSMIT IF AMPLIFIER CIRCUIT (MAIN UNIT)

The modulated IF signal from a modulation circuit is applied to the IF amplifier circuit (Q1). The amplified IF signal is then applied to the RF-A (during VHF) or RF-B (during UHF) unit via the V/U switching circuit (D18).

The gain of the IF amplifier circuit (Q1) is controlled by the ALC amplifier circuit (IC3a). Therefore, the IF amplifier is reduced when the output power increases.

4-2-5 RF CIRCUIT (RF-A AND RF-B UNITS)

The RF circuit consists of mixer and drive amplifiers to obtain the desired frequency and level needed at a PA unit, respectively.

(1) VHF band (RF-A unit)

The IF signal is mixed with an LO signal from the VHF VCO circuit (PLL unit, Q1, D1–D3, D8) at the double-balanced mixer circuit (Q1, Q2) to be converted into a VHF transmit frequency. The mixed signal is then passed through the tunable bandpass filter (D3–D5) to suppress spurious components, and then amplified at the drive amplifiers (IC1, Q4, Q13) to obtain an approx. 800 mW output level.

The amplified RF signal is applied to the PA-A unit via J7.

(2) UHF band (RF-B unit)

The IF signal is mixed with a 2nd LO signal at the double-balanced mixer circuit (Q1, Q2) to produce a 2nd IF signal (71.25 MHz). The 2nd LO signal is generated at the reference oscillator and multiplier circuit (PLL unit, X1, Q14) via LO amplifier (IC2). The 2nd IF signal is amplified at the buffer amplifier (Q3) via the bandpass filter circuit (L3, L4, C12–C14, C164, C178, C179). The amplified 2nd IF signal is applied to the 1st mixer circuit (IC3).

The 1st mixer circuit converts the 2nd IF signal into a UHF transmit frequency with a 1st LO signal from the UHF VCO circuit (PLL unit, Q5, D4, D10). The converted RF signal is amplified at drive amplifiers (IC1, Q4, Q5) to obtain an approx. 200 mW output level. The signal is then applied to the PA-B unit via J3.

Bandpass filters (L36, L37) are designed between drive amplifiers to suppress spurious components in the RF signal.

4-2-6 POWER AMPLIFIER CIRCUIT (PA-A AND PA-B UNITS)

The power amplifier circuit amplifies the RF signals to the specified output power.

(1) VHF power amplifier circuit (PA-A unit)

The RF signal from the RF-A unit is applied to the power amplifier circuit (IC2). The amplified RF signal is applied to the antenna connector (J2) via the power detector (D4–D7, L8), antenna switching (D1–D3) and low-pass filter (L3–L5, C5–C8) circuits.

(2) UHF power amplifier circuit (PA-B unit)

The RF signal from the RF-B unit is applied to the drive amplifier circuit (IC3) to obtain 4–5 W output level and then applied to the power amplifier circuit (IC1). The amplified RF signal is applied to the antenna connector (J1) via the power detector (D4, D5, L9), antenna switching (D1–D3) and low-pass filter (L3–L5, C5–C10) circuits.

4-2-7 ALC CIRCUIT (PA-A, PA-B AND MAIN UNITS)

The ALC (Automatic Level Control) circuit protects the power module (PA-A unit, IC2 for VHF and PA-B unit, IC1 for UHF) from a mismatched output load. Also, the ALC circuit controls the gain of the transmit IF amplifier in order for the transceiver to output a constant RF power set by the [RF PWR] control even when the supplied voltage shifts, etc.

The RF power level is detected at the power detector circuit (PA-A unit, D4–D7, L8 for VHF, PA-B unit D4, D5, L9 for UHF) to be converted into DC voltages. The detected voltage (FORA for VHF or FORB for UHF) is applied to the difference amplifier (MAIN unit, IC3a). A reference voltage (POCO) for IC3a is controlled by the [RF PWR] control to output difference voltages. The output voltage is applied to the transmit IF amplifier circuit (MAIN unit, Q1) as an AALC signal to control the amplifier gain.

• **APC and ALC circuits**

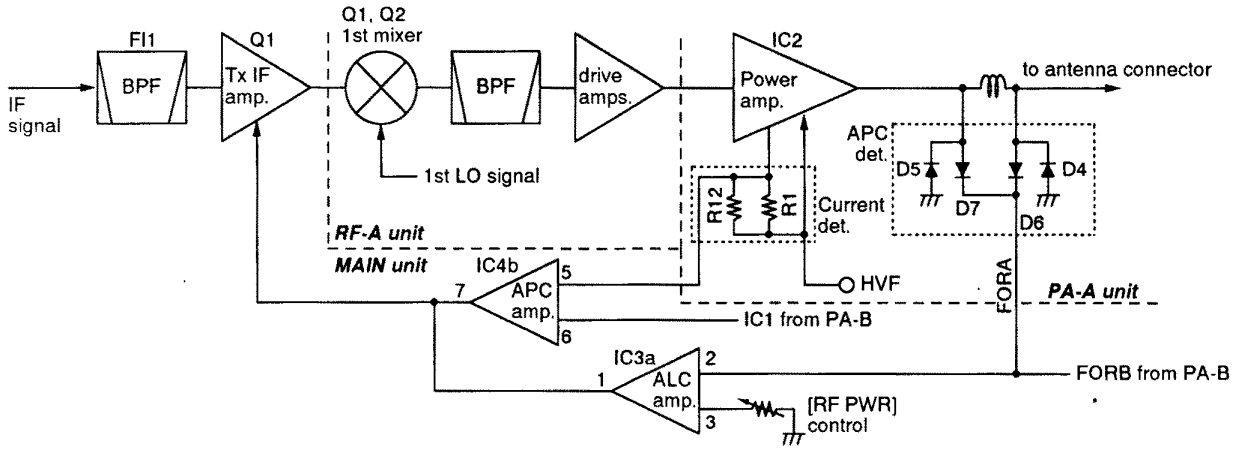

Downloaded from www.Manualslib.com manuals search engine

When the FORA/FORB voltage increased, the output from the difference amplifier will be decrease to reduce the IF amplifier gain. This adjusts the RF output power until the FORA/FORB and POCO voltages are well-balanced.

4-2-8 APC CIRCUIT (PA-A, PA-B AND MAIN UNITS)

The APC (Automatic Power Control) circuit protects the power amplifiers on the PA-A and PA-B units from excessive current.

Current drain of power amplifiers is detected by voltage drops at resistors (PA-A unit R1, R12 and PA-B unit R1, R16). The original voltage (IC1) and dropped voltage (AIC2 or BIC2) are applied to the APC difference amplifier (MAIN unit, IC4a or IC4b).

The signal output from the difference amplifier reduces IF amplifier gain until these voltages are well-balanced.

4-3 PLL CIRCUITS

IC-821H contains 2 PLL circuits and 1 local oscillator. The VHF and UHF PLL circuits adopt "Icom's original I-loop PLL" to obtain very fast lock up times.

4-3-1 VHF PLL CIRCUIT (PLL UNIT)

The VHF PLL circuit generates the 1st LO frequency, and the signals are applied to the 1st mixer circuits in the RF-A unit. The PLL circuit consists of a VCO, prescaler and DDS circuits.

The signal generated at the VHF VCO circuit (Q1, D1–D3, D8) is amplified at the buffer-amplifiers (Q2, IC5), then applied to the prescaler circuit (IC4). The prescaler circuit divides the applied signal, and outputs it to the VHF DDS circuit (IC1) via the buffer-amplifier (Q4). The VHF DDS circuit generates digital signals using the applied signal as a clock frequency. The phase detector section in IC1 compares it's phase with the reference frequency which is generated at the reference oscillator (X1). IC1 outputs off-phase components as pulse signals via pins 52, 53.

The output pulses are converted into DC voltage at the loop filter circuit (IC2a) and then applied to the VHF VCO circuit.

The D/A converter (R15–R38), low-pass filter (L2–L4, C4–C10) and buffer-amplifier (IC14) circuits are connected to the DDS output to convert the digital oscillated signals into smooth analog signals.

The output DC voltage from the loop filter circuit is also applied to the RF-A unit to control the tuned bandpass filter.

• **PLL circuits**

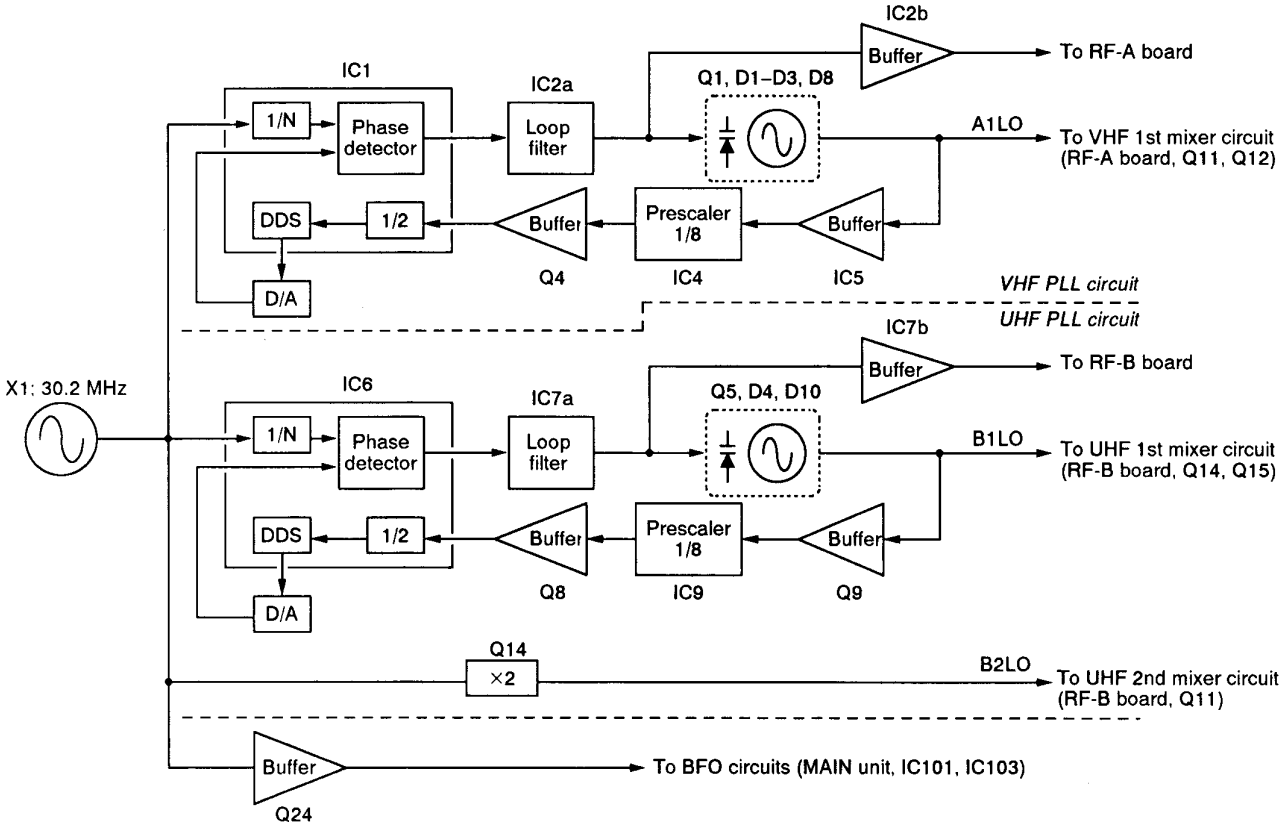

Downloaded from www.Manualslib.com manuals search engine

4-3-2 UHF PLL CIRCUIT (PLL UNIT)

The UHF PLL circuit generates the 1st LO frequency, and the signals are applied to the 1st mixer circuits in the RF-B unit. The PLL circuit consists of a VCO, prescaler and DDS circuits.

The signal generated at the UHF VCO circuit (Q5, D4, D10) is amplified at the buffer-amplifiers (Q6, Q9), then applied to the prescaler circuit (IC9). The prescaler circuit divides the applied signal, and outputs it to the UHF DDS circuit (IC6) via the buffer-amplifier (Q8).

The pulses output from the UHF DDS circuit are converted into DC voltage at the loop filter circuit (IC7a) and then applied to the UHF VCO circuit.

The output DC voltage from the loop filter circuit is also applied to the RF-B unit to control the tuned bandpass filter.

4-4 POWER SUPPLY CIRCUITS

4-4-1 VOLTAGE LINES

Line	Description
HVF	The voltage from the external power supply passed through the internal fuse (PA-B unit, F1).
13.8 V	The same voltage as the HVF line (external power supply) which is controlled by the [POWER] switch.
9 V	Common 9 V converted from the 13.8 V line by the 9 V regulator circuit (MAIN unit, IC25). The output voltage is applied to the PLL, demodulator and +5 regulator circuits, etc.
5 V	Common 5 V converted from the 13.8 V line by the 5 V regulator circuit (PLL unit, IC11). The output voltage is used in the PLL unit only.
−5 V	Common −5 V converted from the 13.8 V line by the −5 V DC-DC convertor circuit (MAIN unit, IC26). The output voltage is applied to the AGC, APC and ALC circuits, etc.
M+5	Common 5 V converted from the 9 V line by the 5 V regulator circuit (MAIN unit, IC27). The output voltage is applied to the BFO circuits and optional units, etc.
F+5	Common 5 V converted from the 13.8 V line by the F+5 regulator circuit (DISPLAY unit, IC13). The output voltage is used in the DISPLAY and SW-A units.
T8 V	8 V for transmitter circuits which is converted from the 9 V line by the T8 generator circuit (MAIN unit, Q36, Q45).
R8 V	8 V for receiver circuits which is converted from the 9 V line by the R8 generator circuit (MAIN unit, Q37, Q41).
PAT9	9 V for transmitter circuits, particularly the PA-A unit, which is converted from the 9 V line by the PAT9 generator circuit (MAIN unit, Q42, Q45).
PBT9	9 V for transmitter circuits, particularly the PA-B unit, which is converted from the 9 V line by the PBT9 generator circuit (MAIN unit, Q43, Q44).

4-5 PORT ALLOCATIONS

4-5-1 CPU (DISPLAY UNIT, IC1)

Pin number	Port name	Description
9	$\overline{\text{RES}}$	Input port for reset signal.
15	LCOMP	Outputs control signal for speech compressor circuit. "High": Compressor ON
19	SCK1	Output port for serial clock signal.
21	SO1	Output port for serial data.
22	SCK2	Output port for serial clock signal for PLL circuits.
23	STPA	Output port for strobe signals for VHF DDS circuit (PLL unit, IC1).
24	SO2	Output port for serial data for PLL circuits.
25	STPB	Output port for strobe signals for UHF DDS circuit (PLL unit, IC6).
32	LCTB	Input port for unlock signal from UHF PLL circuit. "High": When PLL-B is unlocked.
33	LCTA	Input port for unlock signal from VHF PLL circuit. "High": When PLL-A is unlocked
37	VBUSY	Input port for optional speech synthesizer busy signal. "High": During speech
40–43	KR1–KR4	Input ports for key matrix.
44–51	KS1–KS8	Outputs strobe signals for key matrix.
52	AFMM	Outputs AF mute signal to the squelch control gate (MAIN unit, IC16b/d) for MAIN band.
53	AFMS	Outputs AF mute signal to the squelch control gate (MAIN unit, IC25b/c/d) for SUB band.
54	MT8A	Outputs control signal for VHF transmitter circuits in RF-A unit.
55	MR8A	Outputs control signal for VHF receiver circuits in RF-A unit while VHF signals are being received on the MAIN band.
56	SR8A	Outputs control signal for VHF receiver circuits in RF-A unit while VHF signals are being received on the SUB band.
57	MT8B	Outputs control signal for UHF transmitter circuits in RF-B unit.
58	MR8B	Outputs control signal for UHF receiver circuits in RF-B unit while UHF signals are being received on the MAIN band.
59	SR8B	Outputs control signal for UHF receiver circuits in RF-B unit while UHF signals are being received on the SUB band.
78	BEEP	Outputs beep audio signals.

Downloaded from www.Manualslib.com manuals search engine

CPU (DISPLAY UNIT, IC1; continue)

Pin number	Port name	Description
79	EKEY	Output port for electronic keyer signal.
81	MET	Outputs meter signals with a PWM wave form.
82, 83	DIUP,	Input ports for the main dial using pulse signals.
84, 85	EDOT, EDSH	Input ports for electronic keyer, "EDOT" for dot and "EDSH" for dash signal.
90	ADSSM	Input port for SUB band's S-meter signal.
91	ADSCM	Input port for SUB band's center indicator signal.
92	ADSMS	Input port for MAIN band's S-meter signal.
93	ADMCM	Input port for MAIN band's center indicator signal.
94	ADSNO	Input port for SUB band's noise level signals.
95	ADMNO	Input port for MAIN band's noise level signals.
96	ADRF	Input port for Tx RF level signal.
97	ADALC	Input port for ALC level signal.
98	ADPTT	Input port for [PTT] switch.
99	ADMIC	Input port for up/down signal from the microphone.

4-5-2 OUTPUT EXPANDER ICs

MAIN unit, IC8

Pin number	Port name	Description
4	MCWN	Outputs CW-N mode select signal for MAIN band.
5	MCW	Outputs CW mode select signal for MAIN band.
6	MSSB	Outputs SSB mode select signal for MAIN band.
7	MAGC	Outputs AGC time constant select signal for MAIN band. "High": AGC fast is selected.
11	MSCN	Outputs scan signal for MAIN band.
12	TSFM	Outputs switching signal of the tone squelch filter for MAIN band.
13	/MFM	Outputs non-FM mode select signal for MAIN band.
14	MFM	Outputs FM mode select signal for MAIN band.

MAIN unit, IC10

Pin number	Port name	Description
4	NB	Outputs noise blanker control signal. "High": Noise blanker activates.
5	SATL	Outputs control signal for satellite mode.
6	MSC	Outputs audio select signal. "High": MAIN band's audio signals are selected.
11	SDOFF	Outputs PTT disable signal to ignore SEND input from the ACC connector.
12	BT8	Outputs UHF transmitter circuit control signal. "High": Transmitting on UHF.
13	R8	Outputs both VHF and UHF receiver circuit control signals. "High": Receiving on VHF/UHF.
14	AT8	Outputs VHF transmitter circuit control signal. "High": Transmitting on VHF.

MAIN unit, IC24

Pin number	Port name	Description
4	SCWN	Outputs CW-N mode select signal for SUB band.
5	SCW	Outputs CW mode select signal for SUB band.
6	SSSB	Outputs SSB mode select signal for SUB band.
7	SAGC	Outputs AGC time constant control signal for SUB band. "High": AGC fast is selected.
11	SSCN	Outputs scan signal for SUB band.
12	TSFM	Outputs switching signal of tone squelch filter for SUB band.
13	/SFM	Outputs FM mode select signal for SUB band.
14	SFM	Outputs non-FM mode select signal for SUB band.

Downloaded from www.Manualslib.com manuals search engine

MAIN unit, IC108

Pin number	Port name	Description
4	SIDE	Outputs side-tone select signal.
5	PHOUT	Outputs switching signal for head phone audio select.
6	EXMOD	Outputs high speed packet control signal. "High": 9600 bps is selected.
11	BKIN	Outputs break-in control signal.
12	TOTC	Outputs TOT control signal.
13	EGAIN	Outputs microphone amplifier gain switching signal for external audio input.

DISPLAY unit, IC8

Pin number	Port name	Description
4	ATT140	Outputs attenuator control signal for VHF band. "High": When attenuator is activated.
5	ATT400	Outputs attenuator control signal for UHF band. "High": When attenuator is activated.
6	PRE140	Outputs pre-amplifier control signal for VHF band. "High": When pre-amplifier is activated.
7	PRE400	Outputs pre-amplifier control signal for UHF band. "High": When pre-amplifier is activated.
12	LDIM	Outputs dimmer control signal. "High": Bright
13	LEDTS	Outputs TX indicator control signal for SUB band. "High": SUB TX indicator lights
14	LEDTM	Outputs TX indicator control signal for MAIN band. "High": MAIN TX indicator lights

Downloaded from www.Manualslib.com manuals search engine

SECTION 5 ADJUSTMENT PROCEDURES

5-1 PREPARATION BEFORE SERVICING

■ REQUIRED TEST EQUIPMENT

EQUIPMENT	GRADE AND RANGE	EQUIPMENT	GRADE AND RANGE
DC power supply	Output voltage : 13.8 V DC Current capacity : 25 A or more	Sweep generator	Frequency range : 120–460 MHz Sweep bandwidth : At least 50 MHz Output impedance : 50Ω
RF power meter (terminated type)	Measuring range : 1–60 W Frequency range : 120–460 MHz Impedance : 50Ω SWR : Less than 1.2 : 1	Standard signal generator (SSG)	Frequency range : 120–460 MHz Output level : 0.1 μV–32 mV (−127 to −17 dBm)
Frequency counter	Frequency range : 0.1–460 MHz Frequency accuracy: ±1 ppm or better Sensitivity : 100 mV or better	Digital multimeter	Input impedance : 10 MΩ/DC or better
		DC voltmeter	Input impedance : 50 kΩ/V DC or better
FM deviation meter	Frequency range : 120–460 MHz Measuring range : 0 to ±5 kHz	Oscilloscope	Frequency range : DC–20 MHz Measuring range : 0.01–10 V
Audio generator	Frequency range : 300–3000 Hz Output level : 1–500 mV	AC millivoltmeter	Measuring range : 10 mV–10 V
		Ammeter	Measuring capacity : 25 A
Spectrum analyzer	Frequency range : At least 1300 MHz Spectrum bandwidth: ±100 MHz or wider	RF voltmeter	Frequency range : 0.1–460 MHz Measuring range : 0.01–10 V
Attenuator	Power attenuation : 50 or 60 dB Capacity : 60 W or more	External speaker	Impedance : 8 Ω Max. input power : 5 W

■ CONNECTIONS

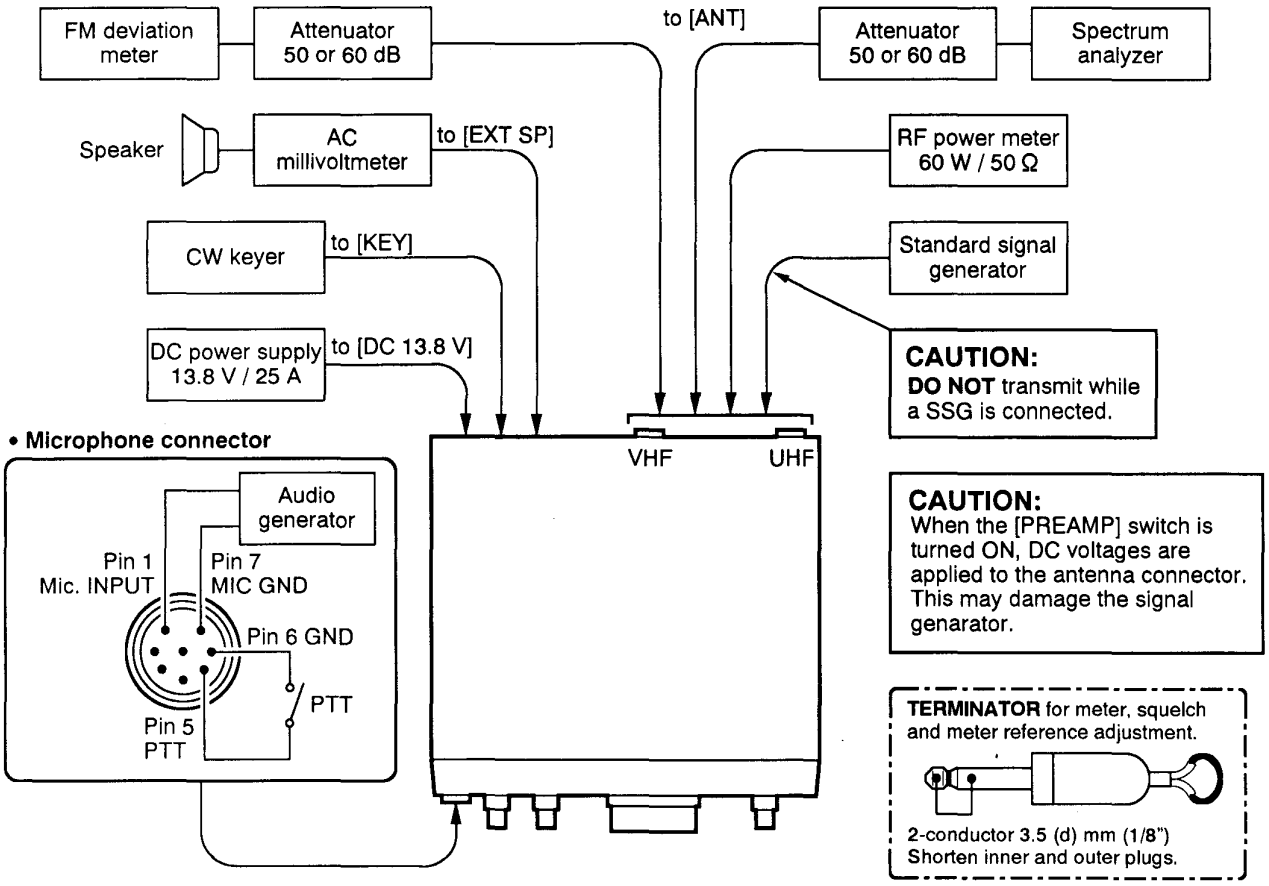

Downloaded from www.Manualslib.com manuals search engine

5-2 PLL ADJUSTMENT

ADJUSTMENT		ADJUSTMENT CONDITIONS	MEASUREMENT		VALUE	ADJUSTMENT POINT	
			UNIT	LOCATION		UNIT	ADJUST
REFERENCE FREQUENCY	1	• MAIN band freq. : Any • Preset C107 to the center position. • Receiving	PLL	Connect an RF voltmeter (50 Ω impedance) to J3 pin 1.	Maximum level (More than −22 dBm)	PLL	L42, L43
	2	• MAIN band freq. : Any • Receiving		Connect a frequency counter to J3 pin 1.	60.40000 MHz		The trimmer capacitor of X1
VHF LOCK VOLTAGE	1	• MAIN band freq. : 145.000 MHz • Mode : FM • Receiving	PLL	Connect a digital multimeter to W11.	3.0 V	PLL	L7
	2	• MAIN band freq. : 136.000 MHz			2.2 V ±0.5 V		Verify
	3	• MAIN band freq. : 174.000 MHz			6.2 V ±0.5 V		
	4	• MAIN band freq. : 145.000 MHz • Receiving		Connect an RF voltmeter (50 Ω impedance) to W11.	−10 dBm ±3 dB		
UHF LOCK VOLTAGE	1	• MAIN band freq. : 440.000 MHz • Mode : FM • Receiving	PLL	Connect a digital multimeter to W13.	4.0 V	PLL	C107
	2	• MAIN band freq. : 420.000 MHz			1.6 V ±0.5 V		Verify
	3	• MAIN band freq. : 460.000 MHz			6.5 V ±0.5 V		
	4	• MAIN band freq. : 440.000 MHz • Receiving		Connect an RF voltmeter (50 Ω impedance) to W13.	−9 dBm ±3 dB		

5-3 FREQUENCY ADJUSTMENT

ADJUSTMENT		ADJUSTMENT CONDITIONS	MEASUREMENT		VALUE	ADJUSTMENT POINT	
			UNIT	LOCATION		UNIT	ADJUST
FM TX-LO FREQUENCY	1	• MAIN band freq. : Any • Mode : FM • Transmitting	MAIN	Connect a frequency counter to J27.	10.85000 MHz	MAIN	L18

Downloaded from www.Manualslib.com manuals search engine

• PLL UNIT

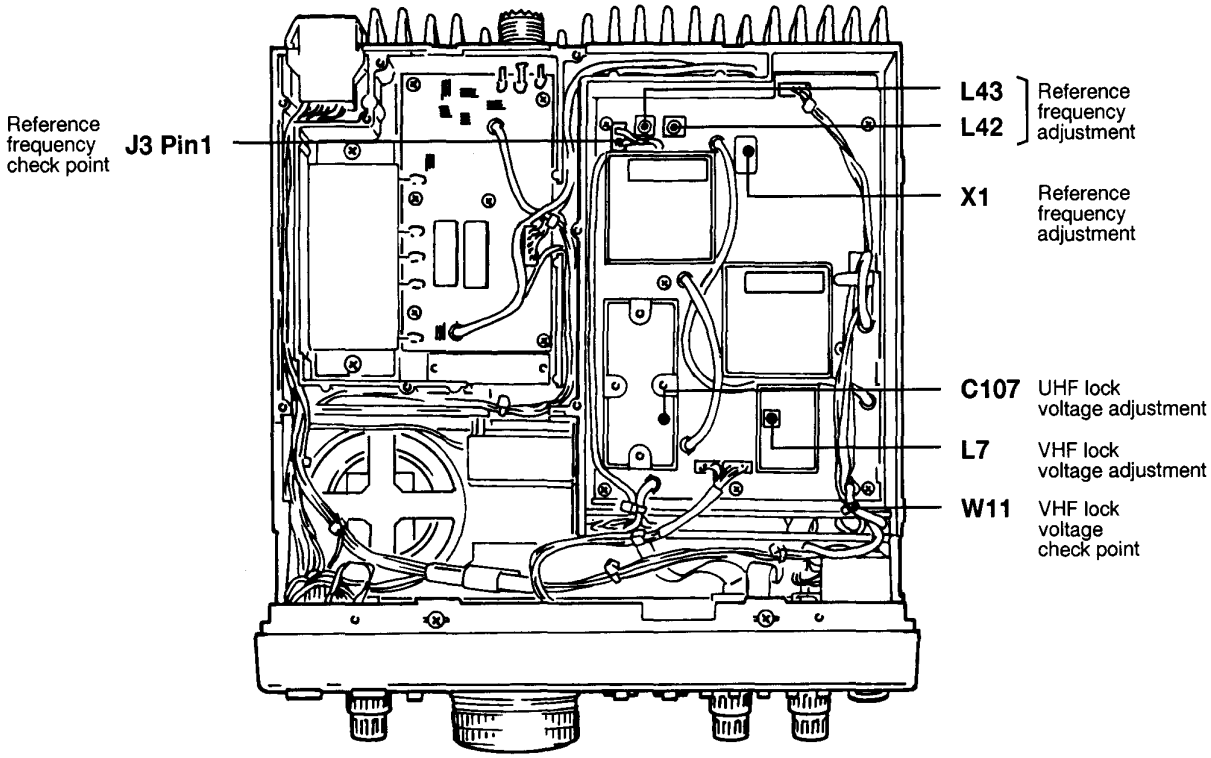

• MAIN UNIT

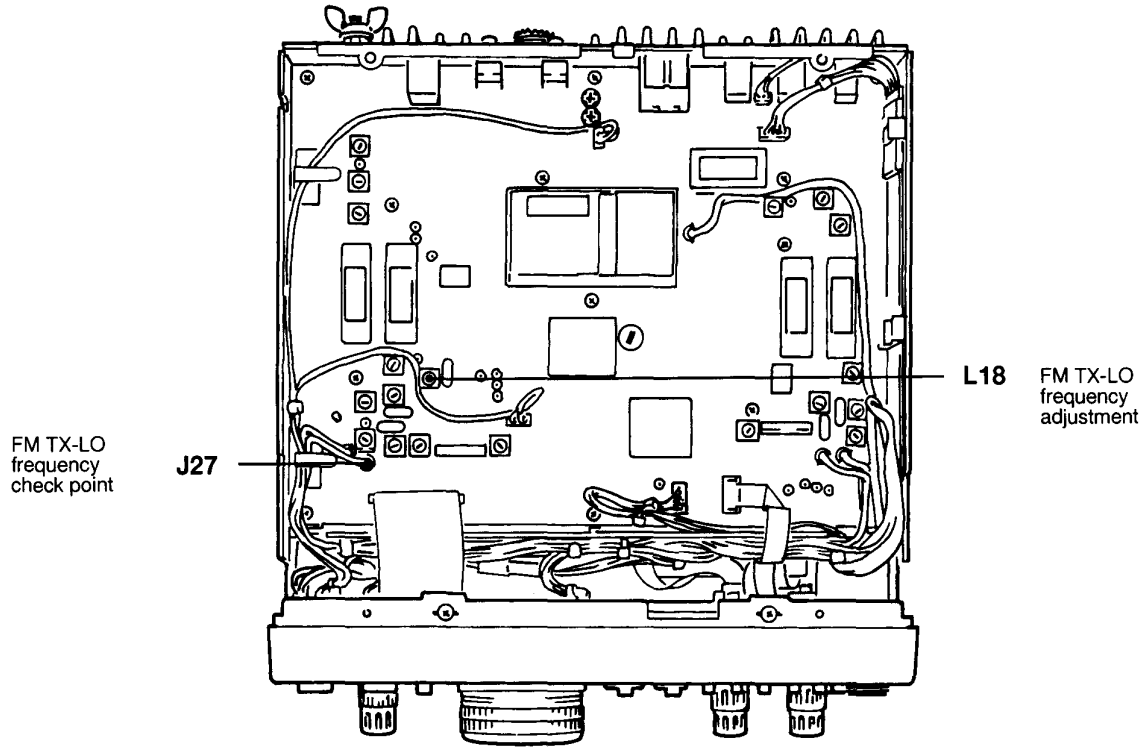

Downloaded from www.Manualslib.com manuals search engine

5-4 RECEIVER ADJUSTMENT

ADJUSTMENT		ADJUSTMENT CONDITIONS	MEASUREMENT		VALUE	ADJUSTMENT POINT	
			UNIT	LOCATION		UNIT	ADJUST
VHF SENSITIVITY (MAIN BAND)	1	• MAIN band freq. : 144.000 MHz • Mode : FM • Connect an SSG to the [VHF ANT] connector and set as: Level : 3.2 μV* (−97 dBm) Modulation : 1 kHz Deviation : ±5 kHz • Receiving	MAIN	Connect a DC voltmeter to C.P. (M-S).	Maximum level	RF-A	Adjust in sequence L16, L15, L14, L13, L21
						MAIN	L11, L12, L13
	2	• Mode : USB • Set an SSG as: Level : 0.1 μV* (−127 dBm) Modulation : OFF	Rear panel	Connect an AC millivoltmeter to the [MAIN SP] jack with an 8 Ω load.	Maximum audio output	MAIN	Adjust in sequence L25, L27, L28
VHF SENSITIVITY (SUB BAND)	1	• SUB band freq. : 144.000 MHz • Mode : FM • Connect an SSG to the [VHF ANT] connector and set as: Level : 3.2 μV* (−97 dBm) Modulation : 1 kHz Deviation : ±5 kHz	MAIN	Connect a DC voltmeter to C.P. (S-S).	Maximum level	MAIN	Adjust in sequence L46, L47, L48
	2	• Mode : USB • Set an SSG as: Level : 0.1 μV* (−127 dBm) Modulation : OFF	Rear panel	Connect an AC millivoltmeter to the [SUB SP] jack with an 8 Ω load.	Maximum audio output		Adjustm in sequence L38, L40, L41
VHF TOTAL GAIN (MAIN BAND)	1	• MAIN band freq. : 144.00000 MHz • Mode : USB • Connect an SSG to the [VHF ANT] connector and set as: Level : 1 mV* (−47 dBm) Modulation : OFF • Receiving	Rear panel	Connect an AC millivoltmeter to the [MAIN SP] jack with an 8 Ω load.	1.5 kHz audio	SSG	Output frequency
					1.0 V (0 dB)	Front panel	[MAIN AF] control
	2	• Set an SSG level as: OFF			100 mV(−20 dB)	MAIN	R239
VHF TOTAL GAIN (SUB BAND)	1	• SUB band freq. : 144.00000 MHz • Mode : USB • Connect an SSG to the [VHF ANT] connector and set as: Level : 1 mV* (−47 dBm) Modulation : OFF • Receiving	Rear panel	Connect an AC millivoltmeter to the [SUB SP] jack with an 8 Ω load.	1.5 kHz audio	SSG	Output frequency
					1.0 V (0 dB)	Front panel	[SUB AF] control
	2	• Set an SSG level as: OFF			100 mV (−20 dB)	MAIN	R378

*This output level of the standard signal generator (SSG) is indicated as SSG's open circuit.

Downloaded from www.Manualslib.com manuals search engine

• MAIN UNIT

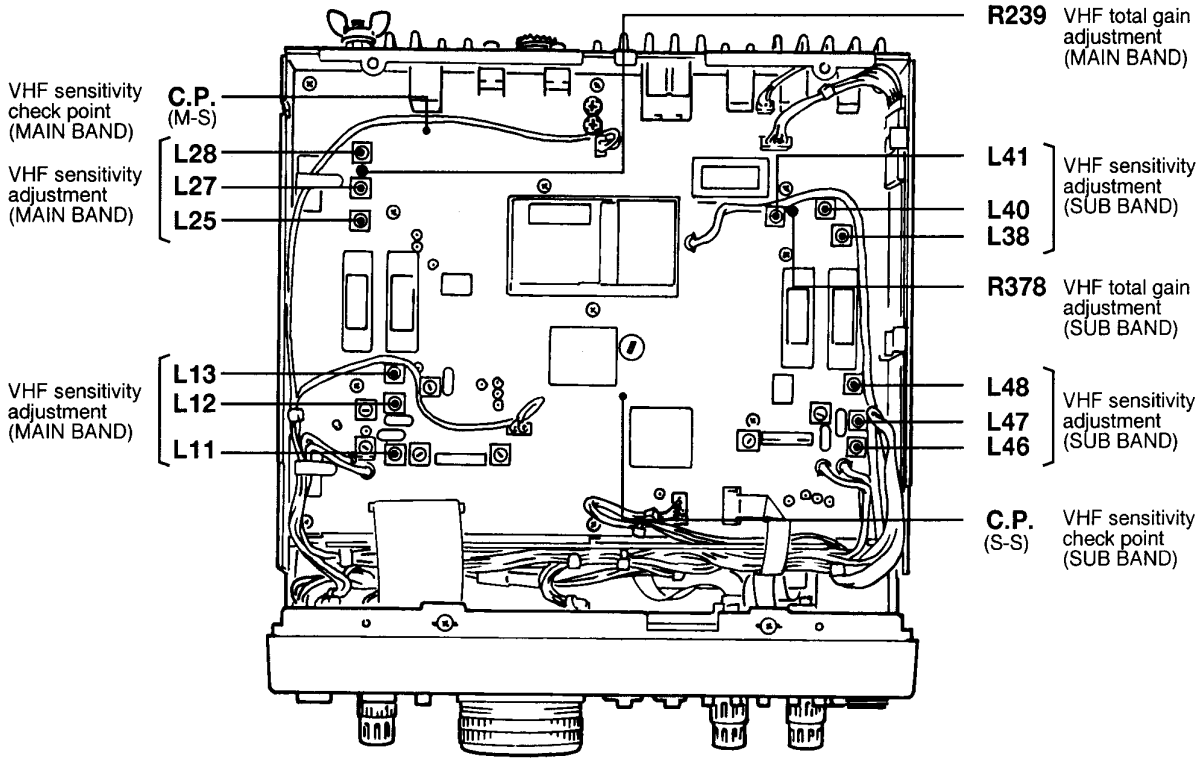

• RF-A UNIT

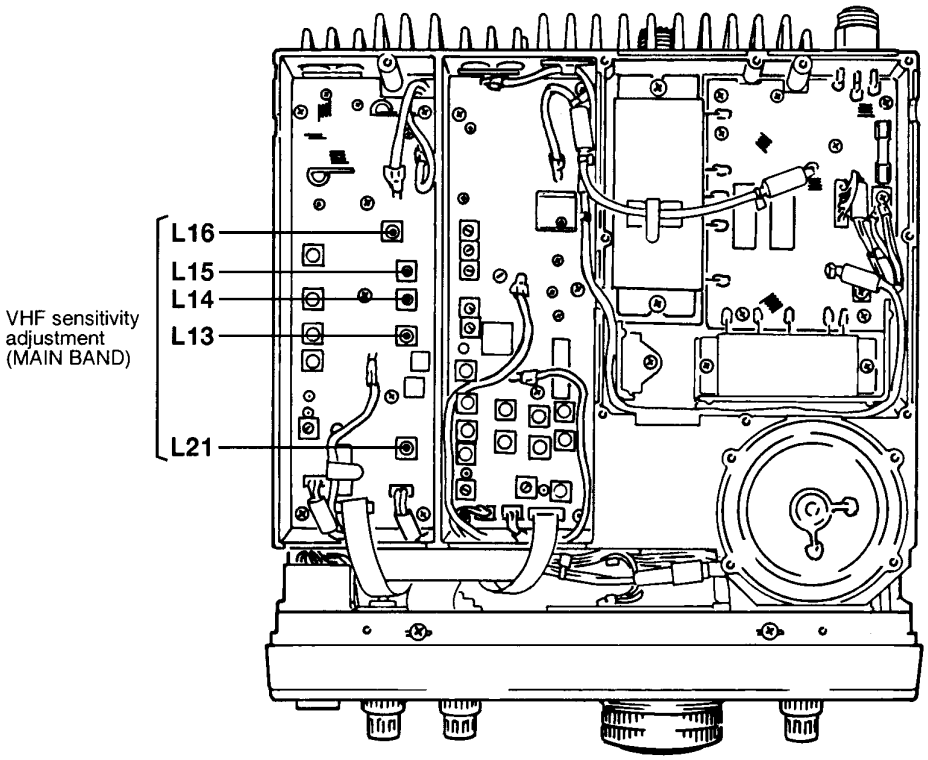

Downloaded from www.Manualslib.com manuals search engine

RECEIVER ADJUSTMENT (CONTINUED)

ADJUSTMENT		ADJUSTMENT CONDITIONS	MEASUREMENT		VALUE	ADJUSTMENT POINT	
			UNIT	LOCATION		UNIT	ADJUST
UHF SENSITIVITY (MAIN BAND)	1	• MAIN band freq. : 430.000 MHz • Mode : FM • Connect an SSG to the [UHF ANT] connector and set as: Level : 3.2 µV* (−97 dBm) Modulation : 1 kHz Deviation : ±5 kHz • Receiving	MAIN	Connect a DC voltmeter to C.P. (M-S).	Maximum level	RF-B	Adjust in repeatedly C132, C120 C114, C108 L27, L23 L26, L21 L20, L22
UHF SENSITIVITY (SUB BAND)	1	• SUB band freq. : 430.000 MHz • Mode : FM • Connect an SSG to the [UHF ANT] connector and set as: Level :3.2 µV* (−97 dBm) Modulation : 1 kHz Deviation : ±5 kHz • Receiving	MAIN	Connect a DC voltmeter to C.P. (S-S).	Maximum level	RF-B	Adjust in sequence L25, L24
UHF RX GAIN	**NOTE:** *Before adjusting UHF RX GAIN, 5-6 METER AND SQUELCH ADJUSTMENT must be adjusted.*						
	1	• MAIN band freq. : [EUR] version 435.000 MHz [USA], [AUS] versions 440.000 MHz • Mode : FM • Connect an SSG to the [UHF ANT] connector and set as: Level : 3.2 µV* (−97 dBm) Modulation : 1 kHz Deviation : ±3.5 kHz • Receiving	Front panel	S-meter	S9	RF-B	R104
	2	• SUB band freq. : [EUR] version 435.000 MHz [USA], [AUS] versions 440.000 MHz • Mode : FM • Receiving	Rear panel	Adjust the connected SSG output level until the S-meter shows S9 level.	3.2 µV (−97 dBm) ±3 dBm	Con-nected SSG	Verify
NOISE BLANKER	1	• MAIN band freq. : 144.00000 MHz • Mode : USB • Connect an SSG to the [VHF ANT] connector and set as: Level : 10 µV* (−87 dBm) and apply following signal to the antenna connector. 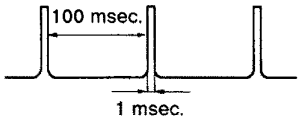 • [NB] : ON • Receiving	Rear panel	Connect an oscilloscope to the [MAIN SP] jack with an 8 Ω load.	Minimum noise level	MAIN	L8, L10
	2	• SUB band freq. : 144.00000 MHz • Mode : USB • Receiving					L118, L110

*This output level of the standard signal generator (SSG) is indicated as SSG's open circuit.

Downloaded from www.Manualslib.com manuals search engine

• RF-B UNIT

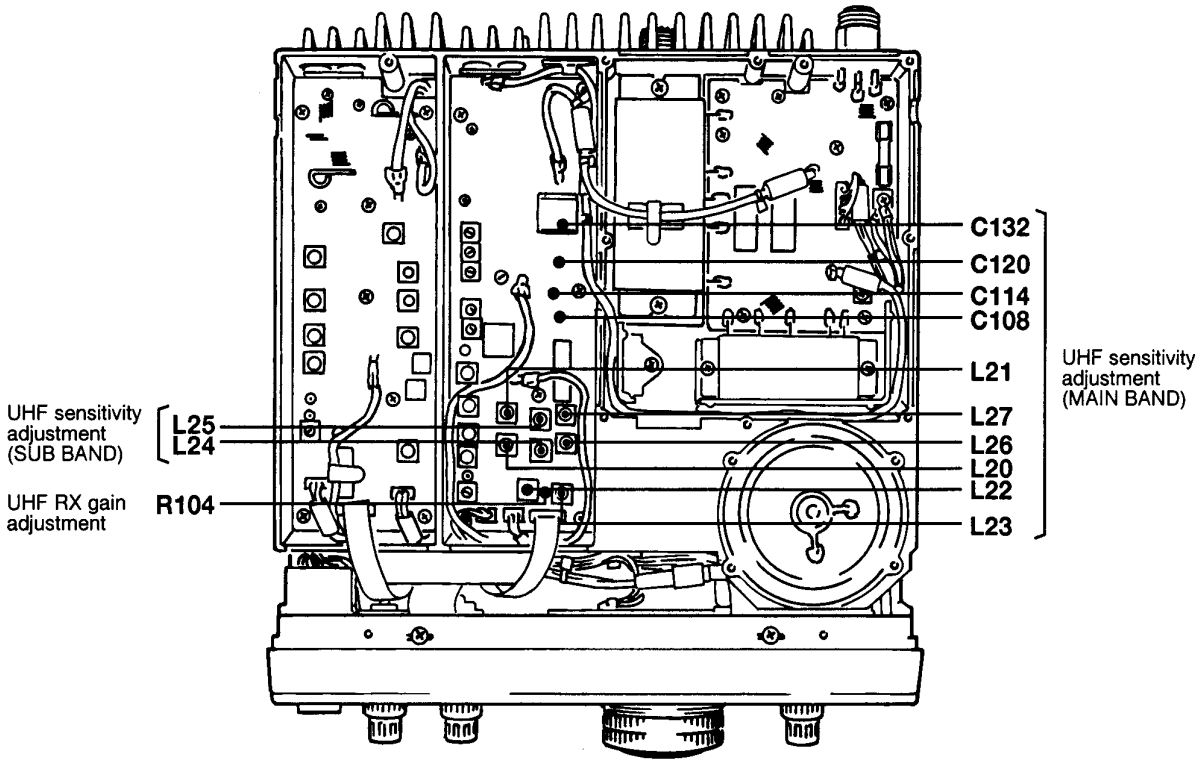

• MAIN UNIT

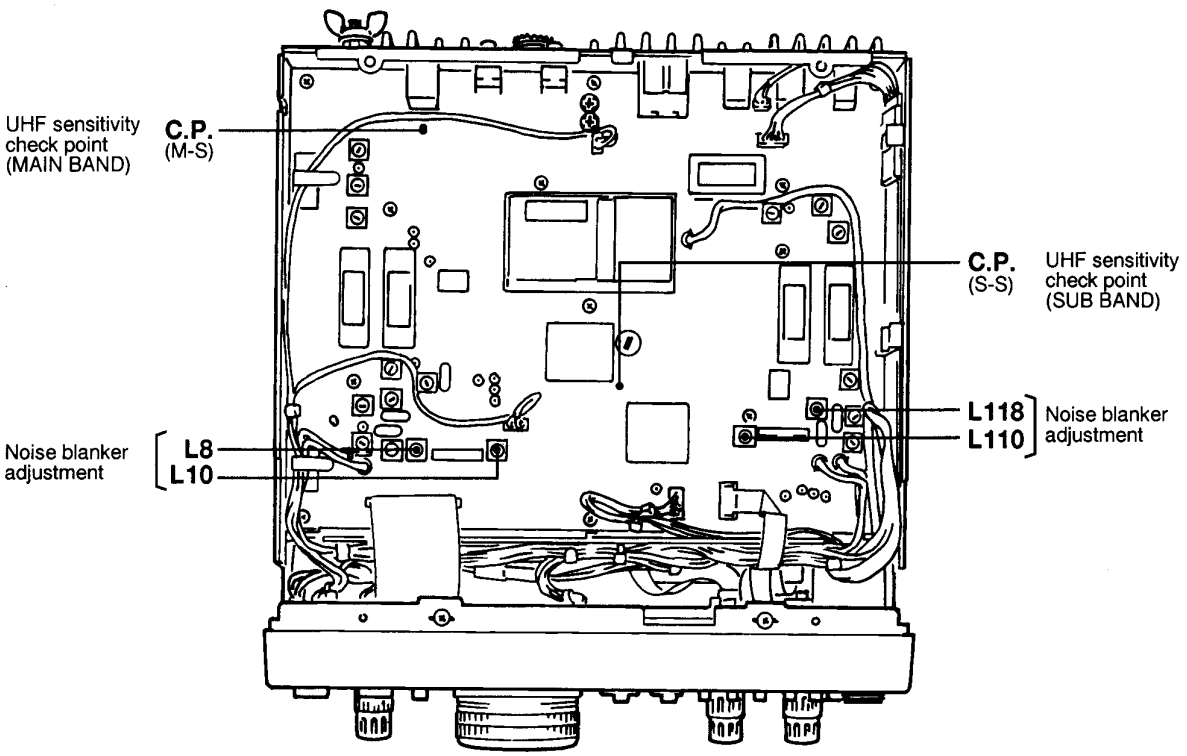

Downloaded from www.Manualslib.com manuals search engine

5-5 TRANSMITTER ADJUSTMENT

ADJUSTMENT		ADJUSTMENT CONDITIONS	MEASUREMENT		VALUE	ADJUSTMENT POINT	
			UNIT	LOCATION		UNIT	ADJUST
UHF HELICAL FILTER	1	• MAIN band freq. : 440.000 MHz • Connect a sweep generator to J7 on the RF-B unit and set as: Sweep level : 71 mV (−10 dBm) Center freq. : 440.000 MHz Sweep bandwidth : 50 MHz • Unplug J1 on the RF-B unit. • Connect an oscilloscope through a detector to J3. • Transmitting	RF-B	Connect an oscilloscope to J3 through a ditector.	Adjust as follows: 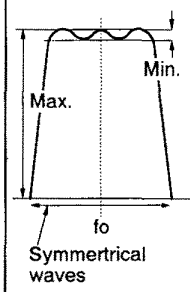	RF-B	L36, L37, C32, C37
UHF TOTAL GAIN	1	• MAIN band freq. : Any • Mode : USB • [MIC GAIN] : Center position • Connect an audio generator to the microphone connector and set as: 1.5 kHz / 2 mV	MAIN	Connect an RF voltmeter to J1 or J2.	Maximum level	MAIN	L1, L2
	2	• Transmitting			18 mV (−22 dBm)		R2
	3	• MAIN band freq. : [EUR] version 435.00000 MHz [USA], [AUS] versions 440.00000 MHz • Mode : USB • [MIC GAIN] : Center position • Connect an audio generator to the microphone connector and set as: 1.5 kHz / 2 mV • Grounds J23 on the MAIN unit.	Rear panel	Connect an RF power meter to the [UHF ANT] connector.	Maximum level	RF-B	Adjust in repeatedly L1, L2, L3, L4, L5
	4	• Transmitting			16 W		R3
VHF TOTAL GAIN	1	• MAIN band freq. : [EUR] version 145.00000 MHz [USA], [AUS] versions 146.00000 MHz • Mode : USB • [MIC GAIN] : Center position • Connect an audio generator to the microphone connector and set as: 1.5 kHz / 2 mV • Grounds J23 on the MAIN unit.	Rear panel	Connect an RF power meter to the [VHF ANT] connector.	Maximum level	RF-A	Adjust in repeatedly L1, L2, L3, L4, L5, C27, C35, C101, C103
	2	• Transmitting			18 W		R3
VHF OUTPUT POWER	1	• MAIN band freq. : [EUR] version 146.00000 MHz [USA], [AUS] versions 148.00000 MHz • Mode : FM • [RF PWR] : Max. level • Transmitting	Rear panle	Connect an RF power meter to the [VHF ANT] connector.	45 W	MAIN	R72
	2	• [RF PWR] : Minimum level • Transmitting			Less than 6 W		Verify
	3	• Mode : USB • Connect an audio generator to the mocrophone connector and set as: 1.5 kHz / 20 mV • [MIC GAIN] : Center position • [RF PWR] : Max. level • Transmitting			35 W		R105

Downloaded from www.Manualslib.com manuals search engine

• RF-A AND RF-B UNITS

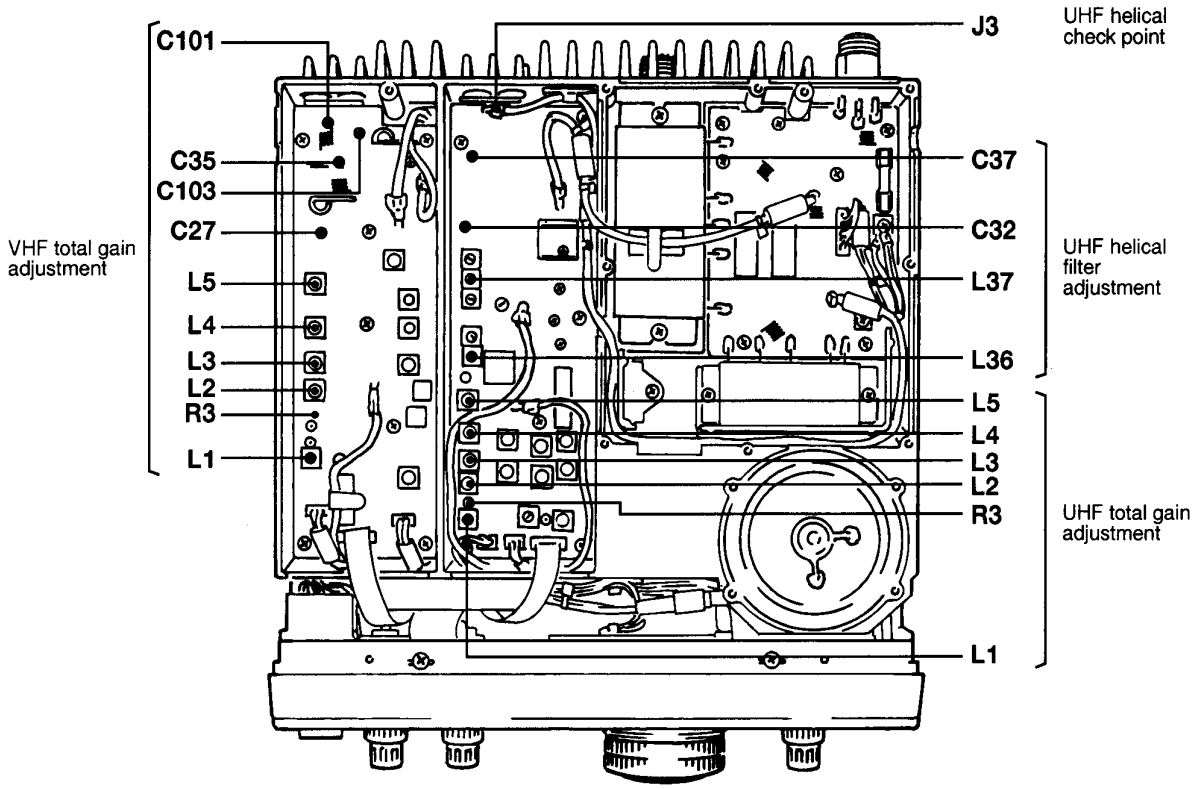

• MAIN UNIT

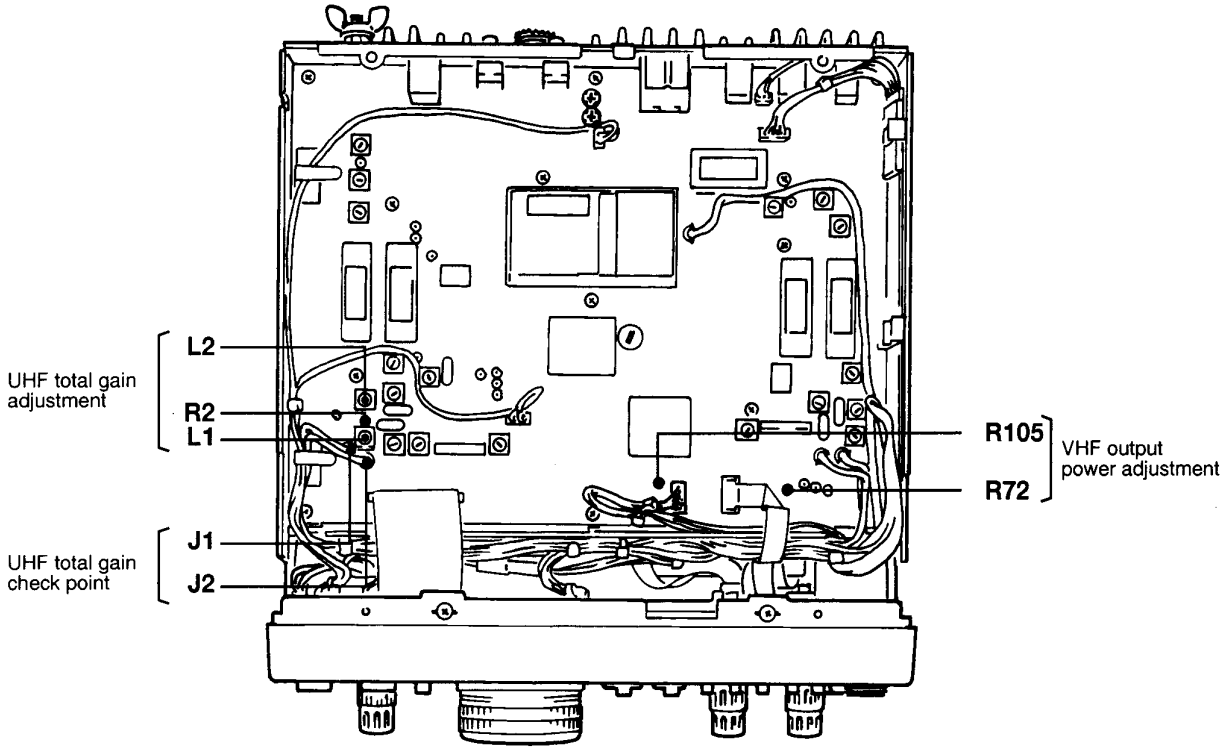

Downloaded from www.Manualslib.com manuals search engine

TRANSMITTER ADJUSTMENT (CONTINUED)

ADJUSTMENT		ADJUSTMENT CONDITIONS	MEASUREMENT		VALUE	ADJUSTMENT POINT	
			UNIT	LOCATION		UNIT	ADJUST
UHF OUTPUT POWER	1	• MAIN band freq. : [EUR] version 435.00000 MHz [USA], [AUS] versions 440.00000 MHz • Mode : FM • [RF PWR] : Max. level • Transmitting	Rear panel	Connect an RF power meter to the [UHF ANT] connector.	40 W	MAIN	R92
	2	• [RF PWR] : Minimum level • Transmitting			Less than 6 W		Verify
	3	• Mode : USB • Connect an audio generator to the mocrophone connector and set as: 1.5 kHz / 20 mV • [MIC GAIN] : Center position • [RF PWR] : Max. level • Transmitting			30–36 W		
FM, CW DRIVE LEVEL	1	• MAIN band freq. : [EUR] version 145.00000 MHz [USA], [AUS] versions 146.00000 MHz • Mode : FM • [RF PWR] : Max. level • Transmitting	MAIN	Connect a digital multimeter to J23.	The same voltage as a transmitting voltage on SSB with maximum output power	MAIN	R136
	2	• Mode : CW • Transmitting by keying					R230
IC APC	1	• MAIN band freq. :144.00000 MHz • Mode : USB • Connect an audio generator to the microphone connector and set as: 1.5 kHz / 20 mV • Grounds J29 on the MAIN unit. • [MIC GAIN] : Max. level • Transmitting	Rear panel	Connect an RF power meter to the [VHF ANT] connector.	55 W	MAIN	R80
	2	• MAIN band freq. : [EUR] version 435.00000 MHz [USA], [AUS] versions 440.00000 MHz • Mode : USB • Grounds J30 on the MAIN unit. • Transmitting		Connect an ammeter between power supply and transceiver.	16 A		R87
FM DEVIATION	1	• MAIN band freq. : Any • Mode : FM • [MIC GAIN] : Center position • Connect an audio generator to the microphone connector and set as: 1 kHz / 20 mV • Transmitting	Rear panle	Connect an FM deviation meter to the transmitting band's antenna connector through an attenuator.	±4.8 kHz	MAIN	R29
	2	• Set an audio generator output level as: 2 mV			±3.5 kHz		R41
T-SQUELCH TONE (EUR version)	1	• MAIN band freq. : Any • [TONE SQL] : ON • Tone frequency : 67 Hz • Applied no audio signals to the microphone connector. • Transmitting	Rear panel	Connect an FM deviation meter to the transmitting band's antenna connector through an attenuator.	±0.6 kHz	MAIN	R66
SUBAUDIBLE TONE (USA, AUS versions)	1	• MAIN band freq. : Any • [TONE] : ON • Tone frequency : 67 Hz • Applied no audio signals to the microphone connector. • Transmitting					R64

Downloaded from www.Manualslib.com manuals search engine

TRANSMITTER ADJUSTMENT (CONTINUED)

ADJUSTMENT		ADJUSTMENT CONDITIONS	MEASUREMENT		VALUE	ADJUSTMENT POINT	
			UNIT	LOCATION		UNIT	ADJUST
TONE BURST (EUR version)	1	• MAIN band freq. : Any • Applied no audio signals to the microphone connector. • Transmitting by the [TONE] switch.	Rear panel	Connect an FM deviation meter to the transmitting band's antenna connector through an attenuator.	±3.5 kHz	MAIN	R64
LO LEAK	1	• MAIN band freq. : 144.00000 MHz • Mode : FM • Transmitting	Rear panle	Connect a spectrum analyzer to the [VHF ANT] connector through an attenuator.	Minimum level on the following frequency: Displayed freq. minus 10.85 MHz (Less than −60 dB)	RF-A	C37
	2	• MAIN band freq. : [EUR] version 146.00000 MHz [USA], [AUS] versions 148.00000 MHz • Transmitting					R4
CARRIER SUPPRES-SION	1	• MAIN band freq. : Any • Mode : USB and LSB • Applied no audio signals to the microphone connector. • Transmitting	Rear panel	Connect a spectrum analyzer to the transmitting band's antenna connector through an attenuator.	Minimum level (Less than −40 dB)	MAIN	R156, R158

• MAIN UNIT

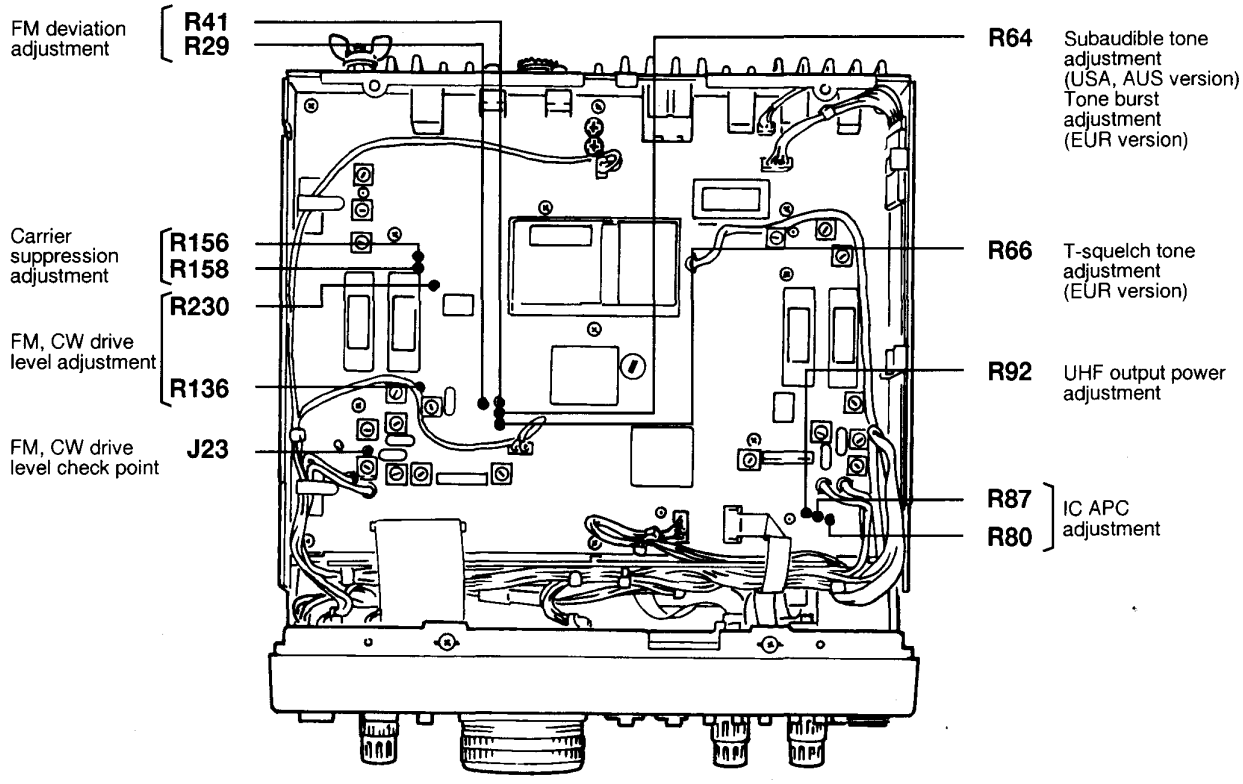

• RF-A UNIT

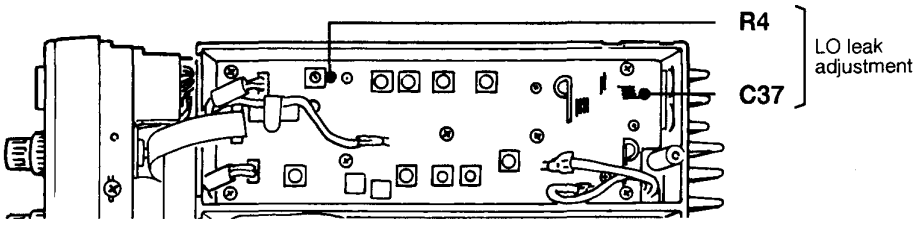

Downloaded from www.Manualslib.com manuals search engine

5-6 METER AND SQUELCH ADJUSTMENT

■ ADJUSTMENT

ADJUSTMENT		ADJUSTMENT CONDITIONS	DISPLAY		OPERATION
			MAIN BAND	SUB BAND	
ENTERING ADJUSTMENT SET MODE		• Connect a terninator to the [REMOTE] connector on the rear panel. • While pushing the [CALL] switch, turn power ON.	SCAn	dn uP 00	Push [UP] to enter receive set mode. Once entering mode, use [UP] / [DOWN] switch to select item.
MAIN BAND S-METER	1	• Connect an SSG to the [VHF ANT] connector and set as: Frequency : 145.02000 MHz Level : 0.32 µV* (−117 dBm) Modulation : OFF • Receiving	USB VFO A 145.0 18.5 1	USB SIG 0 01	Push [CALL]. • Verify "S0" on the analog S-meter.
	2	• Set an SSG level as: 1.1 µV* (−106 dBm)	USB VFO A 145.0 18.5 1	USB SIG 6 02	Push [CALL]. • Verify "S6" on the analog S-meter.
	3	• Set an SSG level as: 3.2 µV* (−97 dBm)	USB VFO A 145.0 18.5 1	USB SIG 9 03	Push [CALL]. • Verify "S9" on the analog S-meter.
	4	• Set an SSG level as: 10 µV* (−87 dBm)	USB VFO A 145.0 18.5 1	USB SIG 20 04	Push [CALL]. • Verify "S9+20" on the analog S-meter.
	5	• Set an SSG level as: 1 mV* (−47 dBm)	USB VFO A 145.0 18.5 1	USB SIG 60 05	Push [CALL]. • Verify "S9+60" on the analog S-meter.
	6	• Set an SSG level as: 0.45 µV* (−114 dBm)	FM VFO A 145.020.0 1	FM SIG 0 06	Push [CALL]. • Verify "S0" on the analog S-meter.
	7	• Set an SSG level as: 3.2 µV* (−97 dBm)	FM VFO A 145.020.0 1	FM SIG 9 07	Push [CALL]. • Verify "S9" on the analog S-meter.
	8	• Set an SSG level as: 32 µV* (−77 dBm)	FM VFO A 145.020.0 1	FM SIG 60 08	Push [CALL]. • Verify "S9+60" on the analog S-meter.
MAIN BAND NOISE SQL	9	• Set an SSG output level as: 0.063 µV* (−131 dBm)	FM VFO A 145.020.0 1	FM nOISES 09	Push [CALL].
	10	• Set an SSG output level as: 0.2 µV* (−121 dBm)	FM VFO A 145.020.0 1	FM nOISEt 10	Push [CALL].
MAIN BAND CENTER	11	• Set an SSG output level as: 10 µV* (−87 dBm)	FM VFO A 145.020.0 1	FM CEntEr 11	Push [CALL].
SUB BAND S-METER	12	• Set an SSG output level as: 0.32 µV* (−117 dBm)	USB SIG 0	USB 145.0 18.5 12	Push [CALL]. • Verify "S0" on the bar-meter.
	13	• Set an SSG output level as: 1.1 µV* (−106 dBm)	USB SIG 6	USB 145.0 18.5 13	Push [CALL]. • Verify "S6" on the bar-meter.
	14	• Set an SSG output level as: 3.2 µV* (−97 dBm)	USB SIG 9	USB 145.0 18.5 14	Push [CALL]. • Verify "S9" on the bar-meter.
	15	• Set an SSG output level as: 10 µV* (−87 dBm)	USB SIG 20	USB 145.0 18.5 15	Push [CALL]. • Verify "S9+20" on the bar-meter.
	16	• Set an SSG output level as: 1 mV* (−47 dBm)	USB SIG 60	USB 145.0 18.5 16	Push [CALL]. • Verify "S9+60" on the bar-meter.

*This output level of standard signal generator (SSG) is indicated as SSG's open circuit.

Downloaded from www.Manualslib.com manuals search engine

■ METER AND SQUELCH ADJUSTMENT (CONTINUED)

ADJUSTMENT		ADJUSTMENT CONDITIONS	DISPLAY		OPERATION
			MAIN BAND	SUB BAND	
SUB BAND S-METER	17	• Set an SSG output level as: 0.45 µV* (−114 dBm)	FM SIG 0	FM 145.020.0 17	Push [CALL]. • Verify "S0" on the bar-meter.
	18	• Set an SSG output level as: 3.2 µV* (−97 dBm)	FM SIG 9	FM 145.020.0 18	Push [CALL]. • Verify "S9" on the bar-meter.
	19	• Set an SSG output level as: 32 µV* (−77 dBm)	FM SIG 60	FM 145.020.0 19	Push [CALL]. • Verify "S60" on the bar-meter.
SUB BAND NOISE SQL	20	• Set an SSG output level as: 0.063 µV* (−131 dBm)	FM NOISES	FM 145.020.0 20	Push [CALL].
	21	• Set an SSG output level as: 0.2 µV* (−121 dBm)	FM NOISE	FM 145.020.0 21	Push [CALL].
SUB BNAD	22	• Set an SSG output level as:	FM CEnteR	FM 145.020.0 22	Push [CALL].

*This output level of standard signal generator (SSG) is indicated as SSG's open circuit.

5-7 RF METER ADJUSTMENT

■ ADJUSTMENT

ADJUSTMENT		ADJUSTMENT CONDITIONS	DISPLAY		OPERATION
			MAIN BAND	SUB BAND	
ENTERING ADJUSTMENT SET MODE		• Connect a terninator to the [REMOTE] connector on the rear panel. • While pushing the [CALL] switch, turn power ON.	SCAn	dn uP 00	Push [DOWN] to enter RF meter set mode.
RF METER	1	• Connect an RF meter to the [VHF ANT] connector. • [RF PWR] : Max. level • Transmitting	FM VFO A 145.120.0 1	FM rF Po 30	Push [CALL] • Verify "80 %" (S9+40) on the analog RF meter.

5-8 METER REFERENCE ADJUSTMENT

NOTE: *This adjustment is not necessary unless the CPU or EEPROM ICs are replaced. The set data would not be cleared by CPU resetting.*

■ ADJUSTMENT

ADJUSTMENT		ADJUSTMENT CONDITIONS	DISPLAY		OPERATION
			MAIN BAND	SUB BAND	
ENTERING ADJUSTMENT SET MODE		• Connect a terminator to the [REMOTE] connector on the rear panel. • While pushing the [CALL] switch, turn power ON.	SCAn	dn uP 00	Push [SCAN] to enter meter reference set mode. Once entering mode, use [UP] / [DOWN] switch to select item.
IF SHIFT CENTER POSITION	1	• Set the [IF SHIFT] and [RIT] to center position.	CEnteR RIT	SHIFt 24	Push [CALL].
METER INDICATION	2	• Set the analog meter indication to "S1" by the [DIAL].	METER	SIG 1 25	Push [CALL].
	3	• Set the analog meter indication to "S9" by the [DIAL].	METER	SIG 9 26	Push [CALL].
	4	• Set the analog meter indication to "S9+20" by the [DIAL].	METER	SIG 20 27	Push [CALL].
	5	• Set the analog meter indication to "S9+60" by the [DIAL].	METER	SIG 60 28	Push [CALL].

Downloaded from www.Manualslib.com manuals search engine

SECTION 6 PARTS LIST

[FRONT UNIT]

REF. NO.	ORDER NO.	DESCRIPTION	
ME1	5510000420	METER	ME-34
EP1	0910041880	FPC	B 4178

[DISP UNIT]

REF. NO.	ORDER NO.	DESCRIPTION	
IC1	1140005940	S.IC	HD6433835A99H
IC2	1140002190	S.IC	HD66100FH
IC3	1110003300	S.IC	M5282FP 70CD
IC6	1110001550	S.IC	S-8054ALB-LM-T1
IC7	1130005720	S.IC	TC7W04F (TE12L)
IC8	1130007700	S.IC	BU4094BCF-T1
IC11	1130007820	S.IC	BU4052BCF-T1
IC12	1180001110	S.IC	PQ20VZ51
IC13	1180001070	S.IC	TA7805F(TE16L)
IC14	1190000340	S.IC	X25160S(5V)
IC15	1180001110	S.IC	PQ20VZ51
IC16	1130007040	S.IC	TC7W32F(TE12L)
IC17	1130004200	S.IC	TC4S66F (TE85R)
Q24	1530002980	S.TRANSISTOR	2SC3650-TD
Q25	1590001000	S.TRANSISTOR	RN2427 (TE85R)
Q26	1590001000	S.TRANSISTOR	RN2427 (TE85R)
Q27	1590000430	S.TRANSISTOR	DTC144EU T107
Q30	1530002690	S.TRANSISTOR	2SC4116-GR (TE85R)
Q31	1510000770	S.TRANSISTOR	2SA1586-GR (TE85R)
Q32	1530002690	S.TRANSISTOR	2SC4116-GR (TE85R)
Q37	1590000680	S.TRANSISTOR	DTC114EU T107
Q38	1590000680	S.TRANSISTOR	DTC114EU T107
Q101	1590000430	S.TRANSISTOR	DTC144EU T107
Q102	1530002690	S.TRANSISTOR	2SC4116-GR (TE85R)
Q103	1590000430	S.TRANSISTOR	DTC144EU T107
Q104	1590001000	S.TRANSISTOR	RN2427 (TE85R)
Q105	1590000430	S.TRANSISTOR	DTC144EU T107
Q106	1590001000	S.TRANSISTOR	RN2427 (TE85R)
Q107	1590000430	S.TRANSISTOR	DTC144EU T107
Q108	1590001000	S.TRANSISTOR	RN2427 (TE85R)
Q109	1590000430	S.TRANSISTOR	DTC144EU T107
Q110	1590001000	S.TRANSISTOR	RN2427 (TE85R)
Q111	1590000430	S.TRANSISTOR	DTC144EU T107
Q112	1590001000	S.TRANSISTOR	RN2427 (TE85R)
Q113	1590000430	S.TRANSISTOR	DTC144EU T107
Q114	1590001000	S.TRANSISTOR	RN2427 (TE85R)
Q115	1530002690	S.TRANSISTOR	2SC4116-GR (TE85R)
Q117	1590000430	S.TRANSISTOR	DTC144EU T107
Q118	1590000680	S.TRANSISTOR	DTC114EU T107
Q119	1510000770	S.TRANSISTOR	2SA1586-GR (TE85R)
Q120	1590000430	S.TRANSISTOR	DTC144EU T107
Q121	1590001330	S.TRANSISTOR	DTA114EU T107
Q122	1590000430	S.TRANSISTOR	DTC144EU T107
Q123	1510000770	S.TRANSISTOR	2SA1586-GR (TE85R)
Q124	1590000430	S.TRANSISTOR	DTC144EU T107
Q125	1590001330	S.TRANSISTOR	DTA114EU T107
Q126	1590000430	S.TRANSISTOR	DTC144EU T107
Q127	1590000430	S.TRANSISTOR	DTC144EU T107
Q128	1590001330	S.TRANSISTOR	DTA114EU T107
Q129	1590000430	S.TRANSISTOR	DTC144EU T107
Q130	1590001330	S.TRANSISTOR	DTA114EU T107
Q131	1590000430	S.TRANSISTOR	DTC144EU T107
Q132	1590000430	S.TRANSISTOR	DTC144EU T107
Q133	1520000560	S.TRANSISTOR	2SB1123T-TD
Q134	1590000430	S.TRANSISTOR	DTC144EU T107
Q135	1590000430	S.TRANSISTOR	DTC144EU T107
Q136	1520000560	S.TRANSISTOR	2SB1123T-TD
Q137	1590000430	S.TRANSISTOR	DTC144EU T107
Q138	1590000680	S.TRANSISTOR	DTC114EU T107

[DISP UNIT]

REF. NO.	ORDER NO.	DESCRIPTION	
D1	1750000550	S.DIODE	1SS355 TE-17
D3	1750000550	S.DIODE	1SS355 TE-17
D4	1750000550	S.DIODE	1SS355 TE-17
D21	1750000550	S.DIODE	1SS355 TE-17
D29	1790000450	S.DIODE	MA862(TX)
D101	1750000550	S.DIODE	1SS355 TE-17
D102	1750000550	S.DIODE	1SS355 TE-17 [EUR], [AUS]
D103	1750000550	S.DIODE	1SS355 TE-17
D104	1750000550	S.DIODE	1SS355 TE-17 [USA], [AUS]
D105	1750000550	S.DIODE	1SS355 TE-17
D106	1750000550	S.DIODE	1SS355 TE-17 [SWE] only
D107	1750000550	S.DIODE	1SS355 TE-17
D109	1160000060	S.DIODE	DAN202U T107
D110	1160000060	S.DIODE	DAN202U T107
D111	1160000060	S.DIODE	DAN202U T107
D112	1160000060	S.DIODE	DAN202U T107
D113	1160000050	S.DIODE	DAP202U T107
D114	1750000550	S.DIODE	1SS355 TE-17
D115	1160000060	S.DIODE	DAN202U T107
D116	1750000550	S.DIODE	1SS355 TE-17
D117	1160000060	S.DIODE	DAN202U T107
D118	1790000660	S.DIODE	MA728(TW)
X1	6050009660	S.XTAL	MA-406 (9.8304 MHz)
L1	6200003240	S.COIL	NL 322522T-221J
L2	6200003240	S.COIL	NL 322522T-221J
R1	7030003680	S.RESISTOR	ERJ3GEYJ 104 V (100 kΩ)
R2	7030003560	S.RESISTOR	ERJ3GEYJ 103 V (10 kΩ)
R3	7030003760	S.RESISTOR	ERJ3GEYJ 474 V (470 kΩ)
R4	7030003440	S.RESISTOR	ERJ3GEYJ 102 V (1 kΩ)
R5	7030003720	S.RESISTOR	ERJ3GEYJ 224 V (220 kΩ)
R11	7030003680	S.RESISTOR	ERJ3GEYJ 104 V (100 kΩ)
R12	7030003720	S.RESISTOR	ERJ3GEYJ 224 V (220 kΩ)
R13	7030003550	S.RESISTOR	ERJ3GEYJ 822 V (8.2 kΩ)
R14	7030003640	S.RESISTOR	ERJ3GEYJ 473 V (47 kΩ)
R15	7030007220	S.RESISTOR	ERA3YED 202V
R22	7030003440	S.RESISTOR	ERJ3GEYJ 102 V (1 kΩ)
R24	7030003520	S.RESISTOR	ERJ3GEYJ 472 V (4.7 kΩ)
R25	7030003640	S.RESISTOR	ERJ3GEYJ 473 V (47 kΩ)
R27	7030003680	S.RESISTOR	ERJ3GEYJ 104 V (100 kΩ)
R28	7030003440	S.RESISTOR	ERJ3GEYJ 102 V (1 kΩ)
R30	7030003650	S.RESISTOR	ERJ3GEYJ 563 V (56 kΩ)
R31	7210002510	TRIMMER	EVU-FLAEC2 C14 (10KC)
R32	7030003510	S.RESISTOR	ERJ3GEYJ 392 V (3.9 kΩ)
R33	7030003440	S.RESISTOR	ERJ3GEYJ 102 V (1 kΩ)
R36	7030003680	S.RESISTOR	ERJ3GEYJ 104 V (100 kΩ)
R37	7030003480	S.RESISTOR	ERJ3GEYJ 222 V (2.2 kΩ)
R44	7030003680	S.RESISTOR	ERJ3GEYJ 104 V (100 kΩ)
R45	7030003560	S.RESISTOR	ERJ3GEYJ 103 V (10 kΩ)
R61	7030003540	S.RESISTOR	ERJ3GEYJ 682 V (6.8 kΩ)
R62	7030003620	S.RESISTOR	ERJ3GEYJ 333 V (33 kΩ)
R63	7030003680	S.RESISTOR	ERJ3GEYJ 104 V (100 kΩ)
R64	7030003590	S.RESISTOR	ERJ3GEYJ 183 V (18 kΩ)
R65	7030003640	S.RESISTOR	ERJ3GEYJ 473 V (47 kΩ)
R94	7030003640	S.RESISTOR	ERJ3GEYJ 473 V (47 kΩ)
R95	7030003480	S.RESISTOR	ERJ3GEYJ 222 V (2.2 kΩ)
R100	7030003380	S.RESISTOR	ERJ3GEYJ 331 V (330 Ω)
R102	7030003560	S.RESISTOR	ERJ3GEYJ 103 V (10 kΩ)
R103	7030000220	S.RESISTOR	MCR10EZHJ 47 Ω (470)
R104	7030000220	S.RESISTOR	MCR10EZHJ 47 Ω (470)
R117	7030003560	S.RESISTOR	ERJ3GEYJ 103 V (10 kΩ)
R118	7030003480	S.RESISTOR	ERJ3GEYJ 222 V (2.2 kΩ)
R201	7030003750	S.RESISTOR	ERJ3GEYJ 394 V (390 kΩ)
R202	7030003750	S.RESISTOR	ERJ3GEYJ 394 V (390 kΩ)
R203	7030003700	S.RESISTOR	ERJ3GEYJ 154 V (150 kΩ)
R204	7030003730	S.RESISTOR	ERJ3GEYJ 274 V (270 kΩ)
R205	7030003800	S.RESISTOR	ERJ3GEYJ 105 V (1 MΩ)

S.=Surface mount

Downloaded from www.Manualslib.com manuals search engine

[DISP UNIT]

REF. NO.	ORDER NO.	DESCRIPTION	
R206	7030003560	S.RESISTOR	ERJ3GEYJ 103 V (10 kΩ)
R207	7030003560	S.RESISTOR	ERJ3GEYJ 103 V (10 kΩ)
R208	7030003640	S.RESISTOR	ERJ3GEYJ 473 V (47 kΩ)
R211	7030003640	S.RESISTOR	ERJ3GEYJ 473 V (47 kΩ)
R212	7030003680	S.RESISTOR	ERJ3GEYJ 104 V (100 kΩ)
R213	7030003640	S.RESISTOR	ERJ3GEYJ 473 V (47 kΩ)
R216	7030003640	S.RESISTOR	ERJ3GEYJ 473 V (47 kΩ)
R217	7030003680	S.RESISTOR	ERJ3GEYJ 104 V (100 kΩ)
R218	7030003560	S.RESISTOR	ERJ3GEYJ 103 V (10 kΩ)
R219	7030003680	S.RESISTOR	ERJ3GEYJ 104 V (100 kΩ)
R220	7030003680	S.RESISTOR	ERJ3GEYJ 104 V (100 kΩ)
R221	7030003680	S.RESISTOR	ERJ3GEYJ 104 V (100 kΩ)
R222	7030003680	S.RESISTOR	ERJ3GEYJ 104 V (100 kΩ)
R223	7030003680	S.RESISTOR	ERJ3GEYJ 104 V (100 kΩ)
R224	7030003720	S.RESISTOR	ERJ3GEYJ 224 V (220 kΩ)
R225	7030003680	S.RESISTOR	ERJ3GEYJ 104 V (100 kΩ)
R226	7030003680	S.RESISTOR	ERJ3GEYJ 104 V (100 kΩ)
R227	7030003720	S.RESISTOR	ERJ3GEYJ 224 V (220 kΩ)
R228	7030003680	S.RESISTOR	ERJ3GEYJ 104 V (100 kΩ)
R229	7030003800	S.RESISTOR	ERJ3GEYJ 105 V (1 MΩ)
R230	7030003800	S.RESISTOR	ERJ3GEYJ 105 V (1 MΩ)
R231	7030003320	S.RESISTOR	ERJ3GEYJ 101 V (100 Ω)
R232	7030003320	S.RESISTOR	ERJ3GEYJ 101 V (100 Ω)
R233	7030003560	S.RESISTOR	ERJ3GEYJ 103 V (10 kΩ)
R235	7210002880	TRIMMER	EVU-FLAEC2 B23
R236	7210002230	TRIMMER	EVU-FLAEC2 B14
R237	7030003560	S.RESISTOR	ERJ3GEYJ 103 V (10 kΩ)
R238	7030003480	S.RESISTOR	ERJ3GEYJ 222 V (2.2 kΩ)
R239	7030003480	S.RESISTOR	ERJ3GEYJ 222 V (2.2 kΩ)
R240	7030003520	S.RESISTOR	ERJ3GEYJ 472 V (4.7 kΩ)
R241	7030003700	S.RESISTOR	ERJ3GEYJ 154 V (150 kΩ)
R242	7030003440	S.RESISTOR	ERJ3GEYJ 102 V (1 kΩ)
R243	7030003420	S.RESISTOR	ERJ3GEYJ 681 V (680 Ω)
R244	7030003550	S.RESISTOR	ERJ3GEYJ 822 V (8.2 kΩ)
R245	7030003560	S.RESISTOR	ERJ3GEYJ 103 V (10 kΩ)
R246	7030003560	S.RESISTOR	ERJ3GEYJ 103 V (10 kΩ)
R247	7030000280	S.RESISTOR	MCR10EZHJ 150 Ω (151)
R248	7030003560	S.RESISTOR	ERJ3GEYJ 103 V (10 kΩ)
R249	7030003560	S.RESISTOR	ERJ3GEYJ 103 V (10 kΩ)
R250	7030000280	S.RESISTOR	MCR10EZHJ 150 Ω (151)
R251	7030003680	S.RESISTOR	ERJ3GEYJ 104 V (100 kΩ)
R252	7030000380	S.RESISTOR	MCR10EZHJ 1 kΩ (102)
R253	7030000380	S.RESISTOR	MCR10EZHJ 1 kΩ (102)
R254	7030000380	S.RESISTOR	MCR10EZHJ 1 kΩ (102)
R255	7030000380	S.RESISTOR	MCR10EZHJ 1 kΩ (102)
R256	7030003440	S.RESISTOR	ERJ3GEYJ 102 V (1 kΩ)
R257	7030003640	S.RESISTOR	ERJ3GEYJ 473 V (47 kΩ)
R258	7030003680	S.RESISTOR	ERJ3GEYJ 104 V (100 kΩ)
R263	7030003520	S.RESISTOR	ERJ3GEYJ 472 V (4.7 kΩ)
R265	7030003480	S.RESISTOR	ERJ3GEYJ 222 V (2.2 kΩ)
R266	7030003640	S.RESISTOR	ERJ3GEYJ 473 V (47 kΩ)
R267	7030003640	S.RESISTOR	ERJ3GEYJ 473 V (47 kΩ)
R268	7030003640	S.RESISTOR	ERJ3GEYJ 473 V (47 kΩ)
R269	7030003640	S.RESISTOR	ERJ3GEYJ 473 V (47 kΩ)
R270	7030003640	S.RESISTOR	ERJ3GEYJ 473 V (47 kΩ)
R271	7030003640	S.RESISTOR	ERJ3GEYJ 473 V (47 kΩ)
R272	7030003640	S.RESISTOR	ERJ3GEYJ 473 V (47 kΩ)
R273	7030003680	S.RESISTOR	ERJ3GEYJ 104 V (100 kΩ)
R274	7030003640	S.RESISTOR	ERJ3GEYJ 473 V (47 kΩ)
R275	7030003440	S.RESISTOR	ERJ3GEYJ 102 V (1 kΩ)
R276	7030003640	S.RESISTOR	ERJ3GEYJ 473 V (47 kΩ)
R277	7030003640	S.RESISTOR	ERJ3GEYJ 473 V (47 kΩ)
R278	7030006220	S.RESISTOR	ERJ12YJ470H (47 Ω)
R279	7030003560	S.RESISTOR	ERJ3GEYJ 103 V (10 kΩ)
R280	7030003360	S.RESISTOR	ERJ3GEYJ 221 V (220 Ω)
C2	4030009000	S.CERAMIC	C2012 JB 1C 224K-T-A
C14	4510005370	S.ELECTROLITIC	ECEV1AA221P
C15	4510005310	S.ELECTROLITIC	ECEV1CA220SR
C16	4030009110	S.CERAMIC	C3216 JB 1C 474K-T-A
C17	4030006860	S.CERAMIC	C1608 JB 1H 102K-T-A
C18	4030006860	S.CERAMIC	C1608 JB 1H 102K-T-A [USA], [AUS]
C19	4510006220	S.ELECTROLITIC	ECEV1CA101UP
C20	4030006900	S.CERAMIC	C1608 JB 1E 103K-T-A

[DISP UNIT]

REF. NO.	ORDER NO.	DESCRIPTION	
C22	4030009110	S.CERAMIC	C3216 JB 1C 474K-T-A
C23	4030006850	S.CERAMIC	C1608 JB 1H 471K-T-A
C24	4030010210	S.CERAMIC	C3216 JB 1C 105M-T-A
C26	4030006880	S.CERAMIC	C1608 JB 1H 472K-T-A
C27	4030006860	S.CERAMIC	C1608 JB 1H 102K-T-A
C28	4030006860	S.CERAMIC	C1608 JB 1H 102K-T-A
C29	4030006860	S.CERAMIC	C1608 JB 1H 102K-T-A
C30	4030006860	S.CERAMIC	C1608 JB 1H 102K-T-A
C31	4030006860	S.CERAMIC	C1608 JB 1H 102K-T-A
C32	4030006860	S.CERAMIC	C1608 JB 1H 102K-T-A
C33	4030006860	S.CERAMIC	C1608 JB 1H 102K-T-A
C34	4510004630	S.ELECTROLITIC	ECEV1CA100SR
C35	4030006880	S.CERAMIC	C1608 JB 1H 472K-T-A
C36	4030006880	S.CERAMIC	C1608 JB 1H 472K-T-A
C45	4030011600	S.CERAMIC	C1608 JB 1C 104KT-N
C59	4030010210	S.CERAMIC	C3216 JB 1C 105M-T-A
C60	4510004630	S.ELECTROLITIC	ECEV1CA100SR
C72	4030006860	S.CERAMIC	C1608 JB 1H 102K-T-A
C101	4030006860	S.CERAMIC	C1608 JB 1H 102K-T-A
C102	4030006860	S.CERAMIC	C1608 JB 1H 102K-T-A
C103	4030006860	S.CERAMIC	C1608 JB 1H 102K-T-A
C104	4030006900	S.CERAMIC	C1608 JB 1E 103K-T-A
C105	4510004630	S.ELECTROLITIC	ECEV1CA100SR
C106	4030006900	S.CERAMIC	C1608 JB 1E 103K-T-A
C107	4030011600	S.CERAMIC	C1608 JB 1C 104KT-N
C108	4030006880	S.CERAMIC	C1608 JB 1H 472K-T-A
C109	4030006880	S.CERAMIC	C1608 JB 1H 472K-T-A
C110	4510004630	S.ELECTROLITIC	ECEV1CA100SR
C111	4030006880	S.CERAMIC	C1608 JB 1H 472K-T-A
C112	4030006880	S.CERAMIC	C1608 JB 1H 472K-T-A
C113	4510004540	S.ELECTROLITIC	ECEV0JA470SR
C114	4030011600	S.CERAMIC	C1608 JB 1C 104KT-N
C115	4030007020	S.CERAMIC	C1608 CH 1H 120J-T-A
C116	4030007020	S.CERAMIC	C1608 CH 1H 120J-T-A
C117	4030006860	S.CERAMIC	C1608 JB 1H 102K-T-A
C118	4030006860	S.CERAMIC	C1608 JB 1H 102K-T-A
C119	4030006860	S.CERAMIC	C1608 JB 1H 102K-T-A
C120	4030006880	S.CERAMIC	C1608 JB 1H 472K-T-A
C121	4030006880	S.CERAMIC	C1608 JB 1H 472K-T-A
C122	4030006880	S.CERAMIC	C1608 JB 1H 472K-T-A
C123	4030006880	S.CERAMIC	C1608 JB 1H 472K-T-A
C124	4030006880	S.CERAMIC	C1608 JB 1H 472K-T-A
C125	4030006880	S.CERAMIC	C1608 JB 1H 472K-T-A
C126	4030006880	S.CERAMIC	C1608 JB 1H 472K-T-A
C127	4030006880	S.CERAMIC	C1608 JB 1H 472K-T-A
C128	4030006880	S.CERAMIC	C1608 JB 1H 472K-T-A
C129	4030006880	S.CERAMIC	C1608 JB 1H 472K-T-A
C130	4030006880	S.CERAMIC	C1608 JB 1H 472K-T-A
C131	4030006880	S.CERAMIC	C1608 JB 1H 472K-T-A
C132	4030006860	S.CERAMIC	C1608 JB 1H 102K-T-A
C133	4510004650	S.ELECTROLITIC	ECEV1EA4R7SR
C134	4030006860	S.CERAMIC	C1608 JB 1H 102K-T-A
C135	4030006860	S.CERAMIC	C1608 JB 1H 102K-T-A
C136	4030011600	S.CERAMIC	C1608 JB 1C 104KT-N
C137	4030009110	S.CERAMIC	C3216 JB 1C 474K-T-A
C138	4510004650	S.ELECTROLITIC	ECEV1EA4R7SR
C139	4030006860	S.CERAMIC	C1608 JB 1H 102K-T-A
C140	4030006860	S.CERAMIC	C1608 JB 1H 102K-T-A
C141	4030009090	S.CERAMIC	C3216 JB 1C 334K-T-A
C142	4030006900	S.CERAMIC	C1608 JB 1E 103K-T-A
C143	4510004630	S.ELECTROLITIC	ECEV1CA100SR
C144	4030006880	S.CERAMIC	C1608 JB 1H 472K-T-A
C145	4030006880	S.CERAMIC	C1608 JB 1H 472K-T-A
C146	4030006880	S.CERAMIC	C1608 JB 1H 472K-T-A
C147	4030006880	S.CERAMIC	C1608 JB 1H 472K-T-A
C148	4030006860	S.CERAMIC	C1608 JB 1H 102K-T-A
C149	4030006860	S.CERAMIC	C1608 JB 1H 102K-T-A
C150	4030006860	S.CERAMIC	C1608 JB 1H 102K-T-A
C151	4030006880	S.CERAMIC	C1608 JB 1H 472K-T-A
C152	4030009110	S.CERAMIC	C3216 JB 1C 474K-T-A
C153	4030009110	S.CERAMIC	C3216 JB 1C 474K-T-A
DS1	5030001390	LCD	FTD-15518ABH

S.=Surface mount

Downloaded from www.Manualslib.com manuals search engine

[DISP UNIT]

REF. NO.	ORDER NO.	DESCRIPTION	
DS2	5080000330	LAMP	HRS-7219A-RE
DS3	5080000330	LAMP	HRS-7219A-RE
DS4	5080000330	LAMP	HRS-7219A-RE
DS5	5080000330	LAMP	HRS-7219A-RE
DS6	5040001830	LED	VRBG3349S
DS7	5040001830	LED	VRBG3349S
S6	2230000920	SWITCH	ESB-84544
J1	6510007170	CONNECTOR	PI28A-03M
J2	6510007170	CONNECTOR	PI28A-03M
J3	6510016810	S.CONNECTOR	IMSA-9611S-05Y900
J4	6510016810	S.CONNECTOR	IMSA-9611S-05Y900
J5	6510016810	S.CONNECTOR	IMSA-9611S-05Y900
J6	6510016870	S.CONNECTOR	08FPZ-SM-TF
J7	6510018870	S.CONNECTOR	00-6208-517-310-000
J9	6510007170	CONNECTOR	PI28A-03M
J10	6510007110	CONNECTOR	PI28A-10M
J12	6510018530	S.CONNECTOR	00-6208-530-410-006
J13	6510018500	S.CONNECTOR	00-6208-507-110-000
J14	6510003390	CONNECTOR	B03B-EH-S
J15	6510019920	CONNECTOR	IMSA-9142S-14A
J16	6510019280	S.CONNECTOR	52610-0990
W1	7120000380	JUMPER	JPW 01 R-01
W2	7120000380	JUMPER	JPW 01 R-01
W4	8900005930	CABLE	OPC-586
W5	8900004810	CABLE	OPC-467
W6	8900004840	CABLE	OPC-470
W7	8900004850	CABLE	OPC-471
W8	8900004850	CABLE	OPC-471
W9	8900004850	CABLE	OPC-471
W10	8900006880	CABLE	OPC-658
EP1	0910047493	PCB	B 4809C
EP2	8930031220	LCD CONTACT	SRCN-1424 SSW

[SW-A UNIT]

REF. NO.	ORDER NO.	DESCRIPTION	
R1	7030003410	S.RESISTOR	ERJ3GEYJ 561 V (560 Ω)
R2	7030003410	S.RESISTOR	ERJ3GEYJ 561 V (560 Ω)
R3	7030003410	S.RESISTOR	ERJ3GEYJ 561 V (560 Ω)
R4	7030003410	S.RESISTOR	ERJ3GEYJ 561 V (560 Ω)
R5	7030003410	S.RESISTOR	ERJ3GEYJ 561 V (560 Ω)
DS1	5040001780	S.LED	SEC 1601C
DS2	5040001780	S.LED	SEC 1601C
DS3	5040001780	S.LED	SEC 1601C
DS4	5040001780	S.LED	SEC 1601C
DS5	5040001780	S.LED	SEC 1601C
J1	6510019910	CONNECTOR	00-9067-071-000-801
J2	6510019910	CONNECTOR	00-9067-071-000-801
W1	7030003860	S.JUMPER	ERJ3GE JPW V
W2	7030003860	S.JUMPER	ERJ3GE JPW V
W3	7030003860	S.JUMPER	ERJ3GE JPW V
W4	7030003860	S.JUMPER	ERJ3GE JPW V
W5	7030003860	S.JUMPER	ERJ3GE JPW V
EP1	0910047502	PCB	B 4810B

[SW-B UNIT]

REF. NO.	ORDER NO.	DESCRIPTION	
J1	6510019620	CONNECTOR	52030-0910
W1	7030003860	S.JUMPER	ERJ3GE JPW V
EP1	0910047511	PCB	B 4811A

[VR UNIT]

REF. NO.	ORDER NO.	DESCRIPTION	
R1	7210002410	VARIABLE	RV-285 (RK0972210) 10KBX2
R2	7030003440	S.RESISTOR	ERJ3GEYJ 102 V (1 kΩ)
J1	6510016810	S.CONNECTOR	IMSA-9611S-05Y900
EP1	0910047540	PCB	B 4814

[RIT UNIT]

REF. NO.	ORDER NO.	DESCRIPTION	
R1	7210002420	VARIABLE	RV-286 (RK0972210) 10KBX2
R2	7030004050	S.RESISTOR	ERJ3GEYJ 1R0 V (1 Ω)
J1	6510016810	S.CONNECTOR	IMSA-9611S-05Y900
EP1	0910047570	PCB	B 4820

[JACK UNIT]

REF. NO.	ORDER NO.	DESCRIPTION	
R1	7030000300	S.RESISTOR	MCR10EZHJ 220 Ω (221)
R2	7030000300	S.RESISTOR	MCR10EZHJ 220 Ω (221)
R3	7030000300	S.RESISTOR	MCR10EZHJ 220 Ω (221)
R4	7030000300	S.RESISTOR	MCR10EZHJ 220 Ω (221)
J1	6450000951	CONNECTOR	HLJ4815-01-02
EP1	0910047550	PCB	B 4815

S.=Surface mount

Downloaded from www.Manualslib.com manuals search engine

[PLL UNIT]

REF. NO.	ORDER NO.	DESCRIPTION	
IC1	1140003641	S.IC	SC-1246
IC2	1110001900	S.IC	µPC4570G2-T1
IC4	1110003270	S.IC	MB511PF-G-BND
IC5	1110003310	S.IC	µPC1688G-T1
IC6	1140003641	S.IC	SC-1246
IC7	1110001900	S.IC	µPC4570G2-T1
IC9	1110003270	S.IC	MB511PF-G-BND
IC11	1180001070	S.IC	TA7805F(TE16L)
IC13	1130007700	S.IC	BU4094BCF-T1
IC14	1130003830	S.IC	TC7S04F (TE85R)
IC15	1130003830	S.IC	TC7S04F (TE85R)
IC16	1130003830	S.IC	TC7S04F (TE85R)
Q1	1560000650	S.FET	2SK1577-2-T7
Q2	1530002920	S.TRANSISTOR	2SC4226-T2 R25
Q3	1590001330	S.TRANSISTOR	DTA114EU T107
Q4	1530002600	S.TRANSISTOR	2SC4215-O (TE85R)
Q5	1560000650	S.FET	2SK1577-2-T7
Q6	1530002920	S.TRANSISTOR	2SC4226-T2 R25
Q7	1590001330	S.TRANSISTOR	DTA114EU T107
Q8	1530002600	S.TRANSISTOR	2SC4215-O (TE85R)
Q9	1560000650	S.FET	2SK1577-2-T7
Q11	1530002600	S.TRANSISTOR	2SC4215-O (TE85R)
Q14	1530002600	S.TRANSISTOR	2SC4215-O (TE85R)
Q19	1530002600	S.TRANSISTOR	2SC4215-O (TE85R)
Q21	1530002690	S.TRANSISTOR	2SC4116-GR (TE85R)
Q24	1530002600	S.TRANSISTOR	2SC4215-O (TE85R)
D1	1720000220	S.VARICAP	1SV166-T2B
D2	1720000220	S.VARICAP	1SV166-T2B
D3	1720000220	S.VARICAP	1SV166-T2B
D4	1790000540	S.VARICAP	MA338(TX)
D8	1720000220	S.VARICAP	1SV166-T2B
D9	1790000620	S.DIODE	MA77(TW)
D10	1790000540	S.VARICAP	MA338(TX)
D11	1750000210	S.DIODE	1SV237 (TE85R)
X1	6050008710	XTAL	CR-452 (30.200 MHz)
L1	6200003330	S.COIL	NL 322522T-1R0J-3
L2	6200003150	S.COIL	NL 322522T-180J
L3	6200001710	S.COIL	NL 322522T-220J
L4	6200003160	S.COIL	NL 322522T-270J
L5	6200001830	S.COIL	NL 322522T-100J
L6	6200003260	S.COIL	NL 322522T-101J
L7	6130002820	COIL	LB-319
L8	6200002980	S.COIL	NL 322522T-R56J-3
L9	6200003260	S.COIL	NL 322522T-101J
L10	6200003000	S.COIL	NL 322522T-R22J-3
L11	6200003330	S.COIL	NL 322522T-1R0J-3
L12	6200004030	S.COIL	NL 322522T-047J
L13	6180002980	S.COIL	NL 322522T-056J
L14	6180002980	S.COIL	NL 322522T-056J
L15	6200003330	S.COIL	NL 322522T-1R0J-3
L16	6200003330	S.COIL	NL 322522T-1R0J-3
L17	6200003330	S.COIL	NL 322522T-1R0J-3
L18	6200003150	S.COIL	NL 322522T-180J
L19	6200001710	S.COIL	NL 322522T-220J
L20	6200003160	S.COIL	NL 322522T-270J
L21	6200003330	S.COIL	NL 322522T-1R0J-3
L22	6200003330	S.COIL	NL 322522T-1R0J-3
L23	6200003330	S.COIL	NL 322522T-1R0J-3
L24	6200003330	S.COIL	NL 322522T-1R0J-3
L25	6200004010	S.COIL	NL 322522T-033J
L26	6200004190	S.COIL	NL 322522T-022J
L27	6200004190	S.COIL	NL 322522T-022J
L28	6200003330	S.COIL	NL 322522T-1R0J-3
L29	6200001030	S.COIL	NL 322522T-012K
L30	6200001030	S.COIL	NL 322522T-012K
L31	6200001830	S.COIL	NL 322522T-100J
L32	6200003030	S.COIL	NL 322522T-R47J-3
L33	6200001830	S.COIL	NL 322522T-100J

[PLL UNIT]

REF. NO.	ORDER NO.	DESCRIPTION	
L42	6150000990	COIL	LS-114
L43	6150000990	COIL	LS-114
L45	6200001830	S.COIL	NL 322522T-100J
L46	6200001830	S.COIL	NL 322522T-100J
L47	6200003330	S.COIL	NL 322522T-1R0J-3
L48	6200001830	S.COIL	NL 322522T-100J
L50	6200001830	S.COIL	NL 322522T-100J
L54	6200000900	S.COIL	LQN 2A R22K 14
L55	6200002190	S.COIL	MLF2012A 4R7K-T
L59	6200001830	S.COIL	NL 322522T-100J
L60	6200003330	S.COIL	NL 322522T-1R0J-3
L61	6200003260	S.COIL	NL 322522T-101J
R1	7030003440	S.RESISTOR	ERJ3GEYJ 102 V (1 kΩ)
R2	7030003440	S.RESISTOR	ERJ3GEYJ 102 V (1 kΩ)
R3	7030003440	S.RESISTOR	ERJ3GEYJ 102 V (1 kΩ)
R4	7030003440	S.RESISTOR	ERJ3GEYJ 102 V (1 kΩ)
R5	7030003440	S.RESISTOR	ERJ3GEYJ 102 V (1 kΩ)
R6	7030003440	S.RESISTOR	ERJ3GEYJ 102 V (1 kΩ)
R7	7030003440	S.RESISTOR	ERJ3GEYJ 102 V (1 kΩ)
R8	7030003680	S.RESISTOR	ERJ3GEYJ 104 V (100 kΩ)
R9	7030003560	S.RESISTOR	ERJ3GEYJ 103 V (10 kΩ)
R10	7030003560	S.RESISTOR	ERJ3GEYJ 103 V (10 kΩ)
R11	7030003280	S.RESISTOR	ERJ3GEYJ 470 V (47 Ω)
R12	7030003400	S.RESISTOR	ERJ3GEYJ 471 V (470 Ω)
R13	7030003630	S.RESISTOR	ERJ3GEYJ 393 V (39 kΩ)
R14	7030003320	S.RESISTOR	ERJ3GEYJ 101 V (100 Ω)
R15	7030007230	S.RESISTOR	ERA3YED 102V
R16	7030007230	S.RESISTOR	ERA3YED 102V
R17	7030007230	S.RESISTOR	ERA3YED 102V
R18	7030007230	S.RESISTOR	ERA3YED 102V
R19	7030007230	S.RESISTOR	ERA3YED 102V
R20	7030007230	S.RESISTOR	ERA3YED 102V
R21	7030007210	S.RESISTOR	ERA3YEB 102V
R22	7030007210	S.RESISTOR	ERA3YEB 102V
R23	7030007210	S.RESISTOR	ERA3YEB 102V
R24	7030007210	S.RESISTOR	ERA3YEB 102V
R25	7030007210	S.RESISTOR	ERA3YEB 102V
R26	7030007220	S.RESISTOR	ERA3YED 202V
R27	7030007220	S.RESISTOR	ERA3YED 202V
R28	7030007220	S.RESISTOR	ERA3YED 202V
R29	7030007220	S.RESISTOR	ERA3YED 202V
R30	7030007220	S.RESISTOR	ERA3YED 202V
R31	7030007220	S.RESISTOR	ERA3YED 202V
R32	7030007220	S.RESISTOR	ERA3YED 202V
R33	7030007220	S.RESISTOR	ERA3YED 202V
R34	7030007200	S.RESISTOR	ERA3YEB 202V
R35	7030007200	S.RESISTOR	ERA3YEB 202V
R36	7030007200	S.RESISTOR	ERA3YEB 202V
R37	7030007200	S.RESISTOR	ERA3YEB 202V
R38	7030007200	S.RESISTOR	ERA3YEB 202V
R39	7030003440	S.RESISTOR	ERJ3GEYJ 102 V (1 kΩ)
R40	7030003320	S.RESISTOR	ERJ3GEYJ 101 V (100 Ω)
R41	7030003560	S.RESISTOR	ERJ3GEYJ 103 V (10 kΩ)
R42	7030003560	S.RESISTOR	ERJ3GEYJ 103 V (10 kΩ)
R43	7030003360	S.RESISTOR	ERJ3GEYJ 221 V (220 Ω)
R44	7030003360	S.RESISTOR	ERJ3GEYJ 221 V (220 Ω)
R45	7030003480	S.RESISTOR	ERJ3GEYJ 222 V (2.2 kΩ)
R46	7030003440	S.RESISTOR	ERJ3GEYJ 102 V (1 kΩ)
R48	7030003840	S.RESISTOR	ERJ3GEYJ 225 V (2.2 MΩ)
R49	7030003280	S.RESISTOR	ERJ3GEYJ 470 V (47 Ω)
R50	7030003360	S.RESISTOR	ERJ3GEYJ 221 V (220 Ω)
R51	7030003320	S.RESISTOR	ERJ3GEYJ 101 V (100 Ω)
R52	7030003550	S.RESISTOR	ERJ3GEYJ 822 V (8.2 kΩ)
R53	7030003460	S.RESISTOR	ERJ3GEYJ 152 V (1.5 kΩ)
R54	7030003280	S.RESISTOR	ERJ3GEYJ 470 V (47 Ω)
R55	7030003320	S.RESISTOR	ERJ3GEYJ 101 V (100 Ω)
R56	7030003600	S.RESISTOR	ERJ3GEYJ 223 V (22 kΩ)
R57	7030003340	S.RESISTOR	ERJ3GEYJ 151 V (150 Ω)
R58	7030003420	S.RESISTOR	ERJ3GEYJ 681 V (680 Ω)
R59	7030003340	S.RESISTOR	ERJ3GEYJ 151 V (150 Ω)
R60	7030003270	S.RESISTOR	ERJ3GEYJ 390 V (39 Ω)
R61	7030003340	S.RESISTOR	ERJ3GEYJ 151 V (150 Ω)
R63	7030003280	S.RESISTOR	ERJ3GEYJ 470 V (47 Ω)
R64	7030003400	S.RESISTOR	ERJ3GEYJ 471 V (470 Ω)

S.=Surface mount

Downloaded from www.Manualslib.com manuals search engine

[PLL UNIT]

REF. NO.	ORDER NO.	DESCRIPTION	
R65	7030003580	S.RESISTOR	ERJ3GEYJ 153 V (15 kΩ)
R68	7030003400	S.RESISTOR	ERJ3GEYJ 471 V (470 Ω)
R69	7030003340	S.RESISTOR	ERJ3GEYJ 151 V (150 Ω)
R70	7030003440	S.RESISTOR	ERJ3GEYJ 102 V (1 kΩ)
R71	7030003440	S.RESISTOR	ERJ3GEYJ 102 V (1 kΩ)
R72	7030003440	S.RESISTOR	ERJ3GEYJ 102 V (1 kΩ)
R73	7030003440	S.RESISTOR	ERJ3GEYJ 102 V (1 kΩ)
R75	7030003440	S.RESISTOR	ERJ3GEYJ 102 V (1 kΩ)
R76	7030003640	S.RESISTOR	ERJ3GEYJ 473 V (47 kΩ)
R77	7030003640	S.RESISTOR	ERJ3GEYJ 473 V (47 kΩ)
R78	7030003640	S.RESISTOR	ERJ3GEYJ 473 V (47 kΩ)
R79	7030003640	S.RESISTOR	ERJ3GEYJ 473 V (47 kΩ)
R81	7030003640	S.RESISTOR	ERJ3GEYJ 473 V (47 kΩ)
R90	7030007230	S.RESISTOR	ERA3YED 102V
R91	7030007230	S.RESISTOR	ERA3YED 102V
R92	7030007230	S.RESISTOR	ERA3YED 102V
R93	7030007230	S.RESISTOR	ERA3YED 102V
R94	7030007230	S.RESISTOR	ERA3YED 102V
R95	7030007230	S.RESISTOR	ERA3YED 102V
R96	7030007210	S.RESISTOR	ERA3YEB 102V
R97	7030007210	S.RESISTOR	ERA3YEB 102V
R98	7030007210	S.RESISTOR	ERA3YEB 102V
R99	7030007210	S.RESISTOR	ERA3YEB 102V
R100	7030007210	S.RESISTOR	ERA3YEB 102V
R101	7030007220	S.RESISTOR	ERA3YED 202V
R102	7030007220	S.RESISTOR	ERA3YED 202V
R103	7030007220	S.RESISTOR	ERA3YED 202V
R104	7030007220	S.RESISTOR	ERA3YED 202V
R105	7030007220	S.RESISTOR	ERA3YED 202V
R106	7030007220	S.RESISTOR	ERA3YED 202V
R107	7030007220	S.RESISTOR	ERA3YED 202V
R108	7030007220	S.RESISTOR	ERA3YED 202V
R109	7030007200	S.RESISTOR	ERA3YEB 202V
R110	7030007200	S.RESISTOR	ERA3YEB 202V
R111	7030007200	S.RESISTOR	ERA3YEB 202V
R112	7030007200	S.RESISTOR	ERA3YEB 202V
R113	7030007200	S.RESISTOR	ERA3YEB 202V
R114	7030003440	S.RESISTOR	ERJ3GEYJ 102 V (1 kΩ)
R115	7030003840	S.RESISTOR	ERJ3GEYJ 225 V (2.2 MΩ)
R116	7030003510	S.RESISTOR	ERJ3GEYJ 392 V (3.9 kΩ)
R117	7030003510	S.RESISTOR	ERJ3GEYJ 392 V (3.9 kΩ)
R120	7030003390	S.RESISTOR	ERJ3GEYJ 391 V (390 Ω)
R121	7030003390	S.RESISTOR	ERJ3GEYJ 391 V (390 Ω)
R122	7030003320	S.RESISTOR	ERJ3GEYJ 101 V (100 Ω)
R123	7030003440	S.RESISTOR	ERJ3GEYJ 102 V (1 kΩ)
R125	7030003360	S.RESISTOR	ERJ3GEYJ 221 V (220 Ω)
R126	7030003340	S.RESISTOR	ERJ3GEYJ 151 V (150 Ω)
R127	7030003320	S.RESISTOR	ERJ3GEYJ 101 V (100 Ω)
R128	7030003520	S.RESISTOR	ERJ3GEYJ 472 V (4.7 kΩ)
R129	7030003490	S.RESISTOR	ERJ3GEYJ 272 V (2.7 kΩ)
R130	7030003360	S.RESISTOR	ERJ3GEYJ 221 V (220 Ω)
R131	7030003340	S.RESISTOR	ERJ3GEYJ 151 V (150 Ω)
R132	7030003320	S.RESISTOR	ERJ3GEYJ 101 V (100 Ω)
R133	7030003320	S.RESISTOR	ERJ3GEYJ 101 V (100 Ω)
R134	7030003300	S.RESISTOR	ERJ3GEYJ 680 V (68 Ω)
R135	7030003320	S.RESISTOR	ERJ3GEYJ 101 V (100 Ω)
R136	7030003600	S.RESISTOR	ERJ3GEYJ 223 V (22 kΩ)
R137	7030003420	S.RESISTOR	ERJ3GEYJ 681 V (680 Ω)
R138	7030003360	S.RESISTOR	ERJ3GEYJ 221 V (220 Ω)
R139	7030003240	S.RESISTOR	ERJ3GEYJ 220 V (22 Ω)
R140	7030003360	S.RESISTOR	ERJ3GEYJ 221 V (220 Ω)
R141	7030003560	S.RESISTOR	ERJ3GEYJ 103 V (10 kΩ)
R142	7030003480	S.RESISTOR	ERJ3GEYJ 222 V (2.2 kΩ)
R143	7030003720	S.RESISTOR	ERJ3GEYJ 224 V (220 kΩ)
R144	7030003280	S.RESISTOR	ERJ3GEYJ 470 V (47 Ω)
R146	7030003660	S.RESISTOR	ERJ3GEYJ 683 V (68 kΩ)
R147	7030003560	S.RESISTOR	ERJ3GEYJ 103 V (10 kΩ)
R148	7030003560	S.RESISTOR	ERJ3GEYJ 103 V (10 kΩ)
R149	7030003400	S.RESISTOR	ERJ3GEYJ 471 V (470 Ω)
R150	7030003320	S.RESISTOR	ERJ3GEYJ 101 V (100 Ω)
R151	7030003280	S.RESISTOR	ERJ3GEYJ 470 V (47 Ω)
R152	7030003560	S.RESISTOR	ERJ3GEYJ 103 V (10 kΩ)
R153	7030003360	S.RESISTOR	ERJ3GEYJ 221 V (220 Ω)
R156	7030003380	S.RESISTOR	ERJ3GEYJ 331 V (330 Ω)
R157	7030003320	S.RESISTOR	ERJ3GEYJ 101 V (100 Ω)
R158	7030003280	S.RESISTOR	ERJ3GEYJ 470 V (47 Ω)

[PLL UNIT]

REF. NO.	ORDER NO.	DESCRIPTION	
R159	7030003400	S.RESISTOR	ERJ3GEYJ 471 V (470 Ω)
R160	7030003630	S.RESISTOR	ERJ3GEYJ 393 V (39 kΩ)
R161	7030003560	S.RESISTOR	ERJ3GEYJ 103 V (10 kΩ)
R162	7030003560	S.RESISTOR	ERJ3GEYJ 103 V (10 kΩ)
R179	7030007510	S.RESISTOR	ERJ12YJ270H (27 Ω)
R180	7030003320	S.RESISTOR	ERJ3GEYJ 101 V (100 Ω)
R181	7030003320	S.RESISTOR	ERJ3GEYJ 101 V (100 Ω)
R182	7030003580	S.RESISTOR	ERJ3GEYJ 153 V (15 kΩ)
R183	7030003480	S.RESISTOR	ERJ3GEYJ 222 V (2.2 kΩ)
R184	7030003340	S.RESISTOR	ERJ3GEYJ 151 V (150 Ω)
R185	7030003290	S.RESISTOR	ERJ3GEYJ 560 V (56 Ω)
R186	7030003380	S.RESISTOR	ERJ3GEYJ 331 V (330 Ω)
R187	7030003290	S.RESISTOR	ERJ3GEYJ 560 V (56 Ω)
R201	7030007510	S.RESISTOR	ERJ12YJ270H (27 Ω)
R202	7030007510	S.RESISTOR	ERJ12YJ270H (27 Ω)
R203	7030003800	S.RESISTOR	ERJ3GEYJ 105 V (1 MΩ)
R204	7030003800	S.RESISTOR	ERJ3GEYJ 105 V (1 MΩ)
R205	7030003270	S.RESISTOR	ERJ3GEYJ 390 V (39 Ω)
R206	7030003340	S.RESISTOR	ERJ3GEYJ 151 V (150 Ω)
R207	7030003440	S.RESISTOR	ERJ3GEYJ 102 V (1 kΩ)
R210	7030003320	S.RESISTOR	ERJ3GEYJ 101 V (100 Ω)
R211	7030003320	S.RESISTOR	ERJ3GEYJ 101 V (100 Ω)
R216	7030003540	S.RESISTOR	ERJ3GEYJ 682 V (6.8 kΩ)
R217	7030003540	S.RESISTOR	ERJ3GEYJ 682 V (6.8 kΩ)
R218	7030003600	S.RESISTOR	ERJ3GEYJ 223 V (22 kΩ)
R219	7030003680	S.RESISTOR	ERJ3GEYJ 104 V (100 kΩ)
R220	7030003680	S.RESISTOR	ERJ3GEYJ 104 V (100 kΩ)
R225	7030003480	S.RESISTOR	ERJ3GEYJ 222 V (2.2 kΩ)
R228	7030003440	S.RESISTOR	ERJ3GEYJ 102 V (1 kΩ)
R230	7030003440	S.RESISTOR	ERJ3GEYJ 102 V (1 kΩ)
R232	7030003340	S.RESISTOR	ERJ3GEYJ 151 V (150 Ω)
R235	7030003280	S.RESISTOR	ERJ3GEYJ 470 V (47 Ω)
R236	7030003560	S.RESISTOR	ERJ3GEYJ 103 V (10 kΩ)
R237	7030003320	S.RESISTOR	ERJ3GEYJ 101 V (100 Ω)
R238	7030003360	S.RESISTOR	ERJ3GEYJ 221 V (220 Ω)
R239	7030003240	S.RESISTOR	ERJ3GEYJ 220 V (22 Ω)
R240	7030003800	S.RESISTOR	ERJ3GEYJ 105 V (1 MΩ)
C1	4030008920	S.CERAMIC	C1608 JB 1C 473K-T-A
C2	4030008920	S.CERAMIC	C1608 JB 1C 473K-T-A
C3	4030008920	S.CERAMIC	C1608 JB 1C 473K-T-A
C4	4030007080	S.CERAMIC	C1608 CH 1H 390J-T-A
C5	4030007050	S.CERAMIC	C1608 CH 1H 220J-T-A
C6	4030007100	S.CERAMIC	C1608 CH 1H 560J-T-A
C7	4030007020	S.CERAMIC	C1608 CH 1H 120J-T-A
C8	4030007110	S.CERAMIC	C1608 CH 1H 680J-T-A
C9	4030006950	S.CERAMIC	C1608 CH 1H 040C-T-A
C10	4030007100	S.CERAMIC	C1608 CH 1H 560J-T-A
C11	4030008920	S.CERAMIC	C1608 JB 1C 473K-T-A
C12	4030008920	S.CERAMIC	C1608 JB 1C 473K-T-A
C13	4030008920	S.CERAMIC	C1608 JB 1C 473K-T-A
C14	4030008920	S.CERAMIC	C1608 JB 1C 473K-T-A
C15	4030008920	S.CERAMIC	C1608 JB 1C 473K-T-A
C16	4030008920	S.CERAMIC	C1608 JB 1C 473K-T-A
C17	4030008920	S.CERAMIC	C1608 JB 1C 473K-T-A
C18	4030008920	S.CERAMIC	C1608 JB 1C 473K-T-A
C19	4030008920	S.CERAMIC	C1608 JB 1C 473K-T-A
C20	4030008920	S.CERAMIC	C1608 JB 1C 473K-T-A
C21	4030008920	S.CERAMIC	C1608 JB 1C 473K-T-A
C23	4550006150	S.TANTALUM	ECST1CY105R
C24	4550006170	S.TANTALUM	ECST1AY225R
C25	4550006170	S.TANTALUM	ECST1AY225R
C26	4030006850	S.CERAMIC	C1608 JB 1H 471K-T-A
C27	4030006860	S.CERAMIC	C1608 JB 1H 102K-T-A
C28	4030006860	S.CERAMIC	C1608 JB 1H 102K-T-A
C29	4030008920	S.CERAMIC	C1608 JB 1C 473K-T-A
C31	4030006860	S.CERAMIC	C1608 JB 1H 102K-T-A
C32	4030007070	S.CERAMIC	C1608 CH 1H 330J-T-A
C33	4030009500	S.CERAMIC	C1608 CH 1H 0R5B-T-A
C34	4510006220	S.ELECTROLITIC	ECEV1CA101UP
C35	4030006860	S.CERAMIC	C1608 JB 1H 102K-T-A
C36	4030006860	S.CERAMIC	C1608 JB 1H 102K-T-A
C37	4030006850	S.CERAMIC	C1608 JB 1H 471K-T-A
C38	4030006860	S.CERAMIC	C1608 JB 1H 102K-T-A
C39	4030007090	S.CERAMIC	C1608 CH 1H 470J-T-A

S.=Surface mount

Downloaded from www.Manualslib.com manuals search engine

[PLL UNIT]

REF. NO.	ORDER NO.	DESCRIPTION	
C40	4030007010	S.CERAMIC	C1608 CH 1H 100D-T-A
C42	4510004440	S.ELECTROLITIC	ECEV1HA010SR
C43	4030006850	S.CERAMIC	C1608 JB 1H 471K-T-A
C44	4030006860	S.CERAMIC	C1608 JB 1H 102K-T-A
C45	4030006860	S.CERAMIC	C1608 JB 1H 102K-T-A
C46	4030007050	S.CERAMIC	C1608 CH 1H 220J-T-A
C47	4030006980	S.CERAMIC	C1608 CH 1H 070D-T-A
C48	4030007060	S.CERAMIC	C1608 CH 1H 270J-T-A
C49	4030006950	S.CERAMIC	C1608 CH 1H 040C-T-A
C50	4030007040	S.CERAMIC	C1608 CH 1H 180J-T-A
C51	4030006860	S.CERAMIC	C1608 JB 1H 102K-T-A
C52	4030006860	S.CERAMIC	C1608 JB 1H 102K-T-A
C53	4030006850	S.CERAMIC	C1608 JB 1H 471K-T-A
C54	4030006860	S.CERAMIC	C1608 JB 1H 102K-T-A
C55	4030006850	S.CERAMIC	C1608 JB 1H 471K-T-A
C57	4030006860	S.CERAMIC	C1608 JB 1H 102K-T-A
C58	4030008920	S.CERAMIC	C1608 JB 1C 473K-T-A
C59	4030006860	S.CERAMIC	C1608 JB 1H 102K-T-A
C60	4030006860	S.CERAMIC	C1608 JB 1H 102K-T-A
C61	4030006960	S.CERAMIC	C1608 CH 1H 050C-T-A
C62	4030006860	S.CERAMIC	C1608 JB 1H 102K-T-A
C63	4030006860	S.CERAMIC	C1608 JB 1H 102K-T-A
C64	4030006850	S.CERAMIC	C1608 JB 1H 471K-T-A
C65	4030008920	S.CERAMIC	C1608 JB 1C 473K-T-A
C66	4030008920	S.CERAMIC	C1608 JB 1C 473K-T-A
C67	4030008920	S.CERAMIC	C1608 JB 1C 473K-T-A
C68	4030007080	S.CERAMIC	C1608 CH 1H 390J-T-A
C69	4030007050	S.CERAMIC	C1608 CH 1H 220J-T-A
C70	4030007100	S.CERAMIC	C1608 CH 1H 560J-T-A
C71	4030007020	S.CERAMIC	C1608 CH 1H 120J-T-A
C72	4030007110	S.CERAMIC	C1608 CH 1H 680J-T-A
C73	4030006950	S.CERAMIC	C1608 CH 1H 040C-T-A
C74	4030007100	S.CERAMIC	C1608 CH 1H 560J-T-A
C75	4030008920	S.CERAMIC	C1608 JB 1C 473K-T-A
C76	4030008920	S.CERAMIC	C1608 JB 1C 473K-T-A
C77	4030008920	S.CERAMIC	C1608 JB 1C 473K-T-A
C78	4030008920	S.CERAMIC	C1608 JB 1C 473K-T-A
C79	4030008920	S.CERAMIC	C1608 JB 1C 473K-T-A
C80	4030008920	S.CERAMIC	C1608 JB 1C 473K-T-A
C81	4030008920	S.CERAMIC	C1608 JB 1C 473K-T-A
C82	4030008920	S.CERAMIC	C1608 JB 1C 473K-T-A
C83	4030008920	S.CERAMIC	C1608 JB 1C 473K-T-A
C84	4030008920	S.CERAMIC	C1608 JB 1C 473K-T-A
C85	4030008920	S.CERAMIC	C1608 JB 1C 473K-T-A
C87	4510004630	S.ELECTROLITIC	ECEV1CA100SR
C88	4030006850	S.CERAMIC	C1608 JB 1H 471K-T-A
C89	4030006860	S.CERAMIC	C1608 JB 1H 102K-T-A
C93	4550006150	S.TANTALUM	ECST1CY105R
C94	4550006560	S.TANTALUM	ECST1CY225R
C95	4550006560	S.TANTALUM	ECST1CY225R
C96	4030008920	S.CERAMIC	C1608 JB 1C 473K-T-A
C97	4030006860	S.CERAMIC	C1608 JB 1H 102K-T-A
C98	4030006850	S.CERAMIC	C1608 JB 1H 471K-T-A
C99	4030006860	S.CERAMIC	C1608 JB 1H 102K-T-A
C100	4510006220	S.ELECTROLITIC	ECEV1CA101UP
C101	4030006850	S.CERAMIC	C1608 JB 1H 471K-T-A
C102	4030008310	S.CERAMIC	C1608 UJ 1H 390J-T-A
C103	4030008180	S.CERAMIC	C1608 UJ 1H 030C-T-A
C104	4030006860	S.CERAMIC	C1608 JB 1H 102K-T-A
C105	4510006220	S.ELECTROLITIC	ECEV1CA101UP
C106	4030006850	S.CERAMIC	C1608 JB 1H 471K-T-A
C107	4610001900	S.TRIMMER	CTZ3E-05A-W1
C108	4030006950	S.CERAMIC	C1608 CH 1H 040C-T-A
C109	4030006950	S.CERAMIC	C1608 CH 1H 040C-T-A
C110	4030006920	S.CERAMIC	C1608 CH 1H 010C-T-A
C111	4030006850	S.CERAMIC	C1608 JB 1H 471K-T-A
C112	4030006860	S.CERAMIC	C1608 JB 1H 102K-T-A
C113	4030006850	S.CERAMIC	C1608 JB 1H 471K-T-A
C114	4030006860	S.CERAMIC	C1608 JB 1H 102K-T-A
C115	4030006960	S.CERAMIC	C1608 CH 1H 050C-T-A
C116	4030006980	S.CERAMIC	C1608 CH 1H 070D-T-A
C117	4030006930	S.CERAMIC	C1608 CH 1H 020C-T-A
C118	4030006980	S.CERAMIC	C1608 CH 1H 070D-T-A
C119	4030007020	S.CERAMIC	C1608 CH 1H 120J-T-A
C120	4510004440	S.ELECTROLITIC	ECEV1HA010SR
C121	4030006850	S.CERAMIC	C1608 JB 1H 471K-T-A

[PLL UNIT]

REF. NO.	ORDER NO.	DESCRIPTION	
C122	4030006860	S.CERAMIC	C1608 JB 1H 102K-T-A
C124	4030006860	S.CERAMIC	C1608 JB 1H 102K-T-A
C125	4030007030	S.CERAMIC	C1608 CH 1H 150J-T-A
C126	4030009470	S.CERAMIC	C1608 CH 1H R75C-T-A
C127	4030007040	S.CERAMIC	C1608 CH 1H 180J-T-A
C128	4030009470	S.CERAMIC	C1608 CH 1H R75C-T-A
C129	4030007030	S.CERAMIC	C1608 CH 1H 150J-T-A
C130	4030006860	S.CERAMIC	C1608 JB 1H 102K-T-A
C131	4030006850	S.CERAMIC	C1608 JB 1H 471K-T-A
C132	4030006860	S.CERAMIC	C1608 JB 1H 102K-T-A
C133	4030006860	S.CERAMIC	C1608 JB 1H 102K-T-A
C134	4030006850	S.CERAMIC	C1608 JB 1H 471K-T-A
C135	4030006880	S.CERAMIC	C1608 JB 1H 472K-T-A
C136	4030006860	S.CERAMIC	C1608 JB 1H 102K-T-A
C137	4030006850	S.CERAMIC	C1608 JB 1H 471K-T-A
C138	4030006860	S.CERAMIC	C1608 JB 1H 102K-T-A
C139	4030006860	S.CERAMIC	C1608 JB 1H 102K-T-A
C140	4030006860	S.CERAMIC	C1608 JB 1H 102K-T-A
C141	4030006860	S.CERAMIC	C1608 JB 1H 102K-T-A
C142	4030006850	S.CERAMIC	C1608 JB 1H 471K-T-A
C143	4030007010	S.CERAMIC	C1608 CH 1H 100D-T-A
C145	4030006860	S.CERAMIC	C1608 JB 1H 102K-T-A
C146	4030006860	S.CERAMIC	C1608 JB 1H 102K-T-A
C148	4030006880	S.CERAMIC	C1608 JB 1H 472K-T-A
C149	4510006220	S.ELECTROLITIC	ECEV1CA101UP
C150	4030006860	S.CERAMIC	C1608 JB 1H 102K-T-A
C151	4030006880	S.CERAMIC	C1608 JB 1H 472K-T-A
C152	4030006860	S.CERAMIC	C1608 JB 1H 102K-T-A
C155	4030007130	S.CERAMIC	C1608 CH 1H 101J-T-A
C156	4030006860	S.CERAMIC	C1608 JB 1H 102K-T-A
C157	4030006860	S.CERAMIC	C1608 JB 1H 102K-T-A
C158	4030006880	S.CERAMIC	C1608 JB 1H 472K-T-A
C159	4030006880	S.CERAMIC	C1608 JB 1H 472K-T-A
C189	4030008920	S.CERAMIC	C1608 JB 1C 473K-T-A
C190	4510004630	S.ELECTROLITIC	ECEV1CA100SR
C191	4510004630	S.ELECTROLITIC	ECEV1CA100SR
C192	4030008920	S.CERAMIC	C1608 JB 1C 473K-T-A
C193	4030006860	S.CERAMIC	C1608 JB 1H 102K-T-A
C194	4030006860	S.CERAMIC	C1608 JB 1H 102K-T-A
C195	4030006880	S.CERAMIC	C1608 JB 1H 472K-T-A
C196	4030006860	S.CERAMIC	C1608 JB 1H 102K-T-A
C197	4030006880	S.CERAMIC	C1608 JB 1H 472K-T-A
C198	4030007030	S.CERAMIC	C1608 CH 1H 150J-T-A
C199	4030006920	S.CERAMIC	C1608 CH 1H 010C-T-A
C200	4030007030	S.CERAMIC	C1608 CH 1H 150J-T-A
C211	4030006900	S.CERAMIC	C1608 JB 1E 103K-T-A
C212	4030006880	S.CERAMIC	C1608 JB 1H 472K-T-A
C213	4030006880	S.CERAMIC	C1608 JB 1H 472K-T-A
C214	4030006880	S.CERAMIC	C1608 JB 1H 472K-T-A
C215	4030006880	S.CERAMIC	C1608 JB 1H 472K-T-A
C216	4030006880	S.CERAMIC	C1608 JB 1H 472K-T-A
C217	4030006880	S.CERAMIC	C1608 JB 1H 472K-T-A
C218	4030006880	S.CERAMIC	C1608 JB 1H 472K-T-A
C219	4030006880	S.CERAMIC	C1608 JB 1H 472K-T-A
C220	4510004630	S.ELECTROLITIC	ECEV1CA100SR
C221	4030010210	S.CERAMIC	C3216 JB 1C 105M-T-A
C223	4030006880	S.CERAMIC	C1608 JB 1H 472K-T-A
C224	4030006860	S.CERAMIC	C1608 JB 1H 102K-T-A
C225	4030006880	S.CERAMIC	C1608 JB 1H 472K-T-A
C226	4030006860	S.CERAMIC	C1608 JB 1H 102K-T-A
C227	4030006860	S.CERAMIC	C1608 JB 1H 102K-T-A
C229	4030006860	S.CERAMIC	C1608 JB 1H 102K-T-A
C230	4030010210	S.CERAMIC	C3216 JB 1C 105M-T-A
C232	4030006860	S.CERAMIC	C1608 JB 1H 102K-T-A
C233	4510006220	S.ELECTROLITIC	ECEV1CA101UP
C243	4510004630	S.ELECTROLITIC	ECEV1CA100SR
C244	4030006850	S.CERAMIC	C1608 JB 1H 471K-T-A
C245	4030006860	S.CERAMIC	C1608 JB 1H 102K-T-A
C246	4510004630	S.ELECTROLITIC	ECEV1CA100SR
C247	4030006850	S.CERAMIC	C1608 JB 1H 471K-T-A
C248	4030006860	S.CERAMIC	C1608 JB 1H 102K-T-A
C254	4030006860	S.CERAMIC	C1608 JB 1H 102K-T-A
C255	4030006860	S.CERAMIC	C1608 JB 1H 102K-T-A
C260	4030006880	S.CERAMIC	C1608 JB 1H 472K-T-A
C261	4030006880	S.CERAMIC	C1608 JB 1H 472K-T-A
C262	4030008630	S.CERAMIC	C1608 JF 1C 104Z-T-A

S.=Surface mount

Downloaded from www.Manualslib.com manuals search engine

[PLL UNIT]

REF. NO.	ORDER NO.	DESCRIPTION	
C263	4030006860	S.CERAMIC	C1608 JB 1H 102K-T-A
C264	4510004650	S.ELECTROLITIC	ECEV1EA4R7SR
C265	4510004650	S.ELECTROLITIC	ECEV1EA4R7SR
C272	4030008920	S.CERAMIC	C1608 JB 1C 473K-T-A
C273	4030008920	S.CERAMIC	C1608 JB 1C 473K-T-A
C277	4030007010	S.CERAMIC	C1608 CH 1H 100D-T-A
C278	4030007010	S.CERAMIC	C1608 CH 1H 100D-T-A
C279	4030007010	S.CERAMIC	C1608 CH 1H 100D-T-A
C280	4030007010	S.CERAMIC	C1608 CH 1H 100D-T-A
C281	4030007130	S.CERAMIC	C1608 CH 1H 101J-T-A
C283	4030007010	S.CERAMIC	C1608 CH 1H 100D-T-A
C284	4030007010	S.CERAMIC	C1608 CH 1H 100D-T-A
C285	4030006960	S.CERAMIC	C1608 CH 1H 050C-T-A
C288	4030006850	S.CERAMIC	C1608 JB 1H 471K-T-A
C289	4030007110	S.CERAMIC	C1608 CH 1H 680J-T-A
C290	4030007010	S.CERAMIC	C1608 CH 1H 100D-T-A
C291	4030006860	S.CERAMIC	C1608 JB 1H 102K-T-A
C292	4030006880	S.CERAMIC	C1608 JB 1H 472K-T-A
C293	4030006860	S.CERAMIC	C1608 JB 1H 102K-T-A
C294	4030006880	S.CERAMIC	C1608 JB 1H 472K-T-A
C295	4030007010	S.CERAMIC	C1608 CH 1H 100D-T-A
C296	4030006880	S.CERAMIC	C1608 JB 1H 472K-T-A
C297	4030010210	S.CERAMIC	C3216 JB 1C 105M-T-A
C298	4030006860	S.CERAMIC	C1608 JB 1H 102K-T-A
C299	4030006850	S.CERAMIC	C1608 JB 1H 471K-T-A
C300	4030006850	S.CERAMIC	C1608 JB 1H 471K-T-A
W11	8900004441	CABLE	OPC-451-1
W13	8900004450	CABLE	OPC-451 A
W17	8900006840	CABLE	OPC-451G-1
W19	8900004500	CABLE	OPC-452
W21	8900004510	CABLE	OPC-452 A
W29	7030003860	S.JUMPER	ERJ3GE JPW V
W30	7030003860	S.JUMPER	ERJ3GE JPW V
W32	7030003860	S.JUMPER	ERJ3GE JPW V
EP1	0910047521	PCB	B 4812A

[MAIN UNIT]

REF. NO.	ORDER NO.	DESCRIPTION	
IC1	1110000960	S.IC	NJM4558M(T1)
IC2	1110000960	S.IC	NJM4558M(T1)
IC3	1110003750	S.IC	M5218AFP 600C
IC4	1110003750	S.IC	M5218AFP 600C
IC5	1110003750	S.IC	M5218AFP 600C
IC6	1110003140	IC	LA1150N
IC7	1110003350	S.IC	µPC1037GR-E1(MS)
IC8	1130007700	S.IC	BU4094BCF-T1
IC9	1130001880	S.IC	µPD4069UBG-T1
IC10	1130007700	S.IC	BU4094BCF-T1
IC11	1110003571	S.IC	MC3372SVMEL
IC12	1110000960	S.IC	NJM4558M(T1)
IC14	1110003350	S.IC	µPC1037GR-E1(MS)
IC15	1110002700	S.IC	NJM2904M-T1
IC16	1130007690	S.IC	BU4066BCF-T1
IC17	1130004200	S.IC	TC4S66F (TE85R)
IC18	1130004200	S.IC	TC4S66F (TE85R)
IC19	1110000960	S.IC	NJM4558M(T1)
IC20	1110003571	S.IC	MC3372SVMEL
IC22	1110003350	S.IC	µPC1037GR-E1(MS)
IC23	1110002700	S.IC	NJM2904M-T1
IC24	1130007700	S.IC	BU4094BCF-T1
IC25	1180001100	IC	PQ09RF2
IC26	1110001400	S.IC	µPC1555G2-T1
IC27	1180001070	S.IC	TA7805F(TE16L)
IC28	1130007690	S.IC	BU4066BCF-T1
IC29	1130007690	S.IC	BU4066BCF-T1
IC30	1110003300	S.IC	M5282FP 70CD
IC31	1110003300	S.IC	M5282FP 70CD

[MAIN UNIT]

REF. NO.	ORDER NO.	DESCRIPTION	
IC32	1110002540	IC	LA4445
IC101	1140004550	S.IC	SC-1287
IC102	1130003830	S.IC	TC7S04F (TE85R)
IC103	1140004550	S.IC	SC-1287
IC104	1130003830	S.IC	TC7S04F (TE85R)
IC107	1130007700	S.IC	BU4094BCF-T1
IC108	1130007700	S.IC	BU4094BCF-T1
IC109	1130008470	S.IC	µPD4053BG(63)-T1
IC110	1130007680	S.IC	BU4053BCF-T1
IC111	1130007680	S.IC	BU4053BCF-T1
IC112	1130006800	S.IC	TC7W08F (TE12L)
IC113	1130004200	S.IC	TC4S66F (TE85R)
IC114	1130005640	S.IC	TC4W53F (TE12L)
IC116	1110002750	S.IC	TA75S01F (TE85R)
IC118	1110002750	S.IC	TA75S01F (TE85R)
IC119	1110003140	IC	LA1150N
IC120	1130007370	S.IC	TA75S558F(TE85L)
Q1	1580000540	S.FET	3SK131-T2-LA
Q2	1590001330	S.TRANSISTOR	DTA114EU T107
Q3	1590001330	S.TRANSISTOR	DTA114EU T107
Q4	1530002690	S.TRANSISTOR	2SC4116-GR (TE85R)
Q5	1590001330	S.TRANSISTOR	DTA114EU T107
Q6	1530002690	S.TRANSISTOR	2SC4116-GR (TE85R)
Q7	1560000560	S.FET	2SK882-GR (TE85L)
Q8	1510000770	S.TRANSISTOR	2SA1586-GR (TE85R)
Q9	1560000560	S.FET	2SK882-GR (TE85L
Q10	1530002690	S.TRANSISTOR	2SC4116-GR (TE85R)
Q11	1530002690	S.TRANSISTOR	2SC4116-GR (TE85R)
Q12	1590001600	S.TRANSISTOR	UMD3 TL
Q13	1580000540	S.FET	3SK131-T2-LA
Q14	1530002690	S.TRANSISTOR	2SC4116-GR (TE85R)
Q15	1590000670	S.TRANSISTOR	FMW1 T148
Q16	1530002690	S.TRANSISTOR	2SC4116-GR (TE85R)
Q17	1530002690	S.TRANSISTOR	2SC4116-GR (TE85R)
Q19	1530003090	S.TRANSISTOR	2SC4213-B (TE85R)
Q20	1590000430	S.TRANSISTOR	DTC144EU T107
Q21	1590000430	S.TRANSISTOR	DTC144EU T107
Q22	1590000430	S.TRANSISTOR	DTC144EU T107
Q23	1590001000	S.TRANSISTOR	RN2427 (TE85R)
Q24	1590001000	S.TRANSISTOR	RN2427 (TE85R)
Q25	1590000430	S.TRANSISTOR	DTC144EU T107
Q26	1590000430	S.TRANSISTOR	DTC144EU T107
Q27	1590000430	S.TRANSISTOR	DTC144EU T107
Q28	1590000430	S.TRANSISTOR	DTC144EU T107
Q29	1590000430	S.TRANSISTOR	DTC144EU T107
Q30	1590000430	S.TRANSISTOR	DTC144EU T107
Q34	1590001330	S.TRANSISTOR	DTA114EU T107
Q37	1590001000	S.TRANSISTOR	RN2427 (TE85R)
Q38	1590001000	S.TRANSISTOR	RN2427 (TE85R)
Q39	1530002690	S.TRANSISTOR	2SC4116-GR (TE85R)
Q40	1530002980	S.TRANSISTOR	2SC3650-TD
Q41	1590000680	S.TRANSISTOR	DTC114EU T107
Q42	1590002030	S.TRANSISTOR	RN2425 (TE85R)
Q43	1590002030	S.TRANSISTOR	RN2425 (TE85R)
Q44	1590000430	S.TRANSISTOR	DTC144EU T107
Q45	1590000430	S.TRANSISTOR	DTC144EU T107
Q49	1590000430	S.TRANSISTOR	DTC144EU T107
Q54	1510000770	S.TRANSISTOR	2SA1586-GR (TE85R)
Q55	1590000430	S.TRANSISTOR	DTC144EU T107
Q57	1590001060	S.TRANSISTOR	DTA114TU T107
Q60	1530002690	S.TRANSISTOR	2SC4116-GR (TE85R)
Q61	1580000540	S.FET	3SK131-T2-LA
Q62	1580000540	S.FET	3SK131-T2-LA
Q64	1590000430	S.TRANSISTOR	DTC144EU T107
Q65	1530002690	S.TRANSISTOR	2SC4116-GR (TE85R)
Q66	1510000770	S.TRANSISTOR	2SA1586-GR (TE85R)
Q67	1510000770	S.TRANSISTOR	2SA1586-GR (TE85R)
Q68	1590000430	S.TRANSISTOR	DTC144EU T107
Q69	1530002690	S.TRANSISTOR	2SC4116-GR (TE85R)
Q70	1590001330	S.TRANSISTOR	DTA114EU T107
Q71	1590000430	S.TRANSISTOR	DTC144EU T107
Q75	1530002690	S.TRANSISTOR	2SC4116-GR (TE85R)
Q77	1530002690	S.TRANSISTOR	2SC4116-GR (TE85R)
Q80	1530002690	S.TRANSISTOR	2SC4116-GR (TE85R)

S.=Surface mount

Downloaded from www.Manualslib.com manuals search engine

[MAIN UNIT]

REF. NO.	ORDER NO.	DESCRIPTION	
Q81	1530002690	S.TRANSISTOR	2SC4116-GR (TE85R)
Q82	1510000770	S.TRANSISTOR	2SA1586-GR (TE85R)
Q83	1530002690	S.TRANSISTOR	2SC4116-GR (TE85R)
Q84	1510000770	S.TRANSISTOR	2SA1586-GR (TE85R)
Q87	1590001000	S.TRANSISTOR	RN2427 (TE85R)
Q88	1590001000	S.TRANSISTOR	RN2427 (TE85R)
Q89	1590001330	S.TRANSISTOR	DTA114EU T107
Q92	1590000430	S.TRANSISTOR	DTC144EU T107
Q93	1590000430	S.TRANSISTOR	DTC144EU T107
Q94	1590000430	S.TRANSISTOR	DTC144EU T107
Q95	1590000430	S.TRANSISTOR	DTC144EU T107
Q96	1590000430	S.TRANSISTOR	DTC144EU T107
Q97	1590000430	S.TRANSISTOR	DTC144EU T107
Q98	1580000540	S.FET	3SK131-T2-LA
Q100	1580000540	S.FET	3SK131-T2-LA
Q101	1580000540	S.FET	3SK131-T2-LA
Q103	1590000430	S.TRANSISTOR	DTC144EU T107
Q104	1530002690	S.TRANSISTOR	2SC4116-GR (TE85R)
Q105	1510000770	S.TRANSISTOR	2SA1586-GR (TE85R)
Q107	1590000430	S.TRANSISTOR	DTC144EU T107
Q108	1590001330	S.TRANSISTOR	DTA114EU T107
Q112	1530002690	S.TRANSISTOR	2SC4116-GR (TE85R)
Q115	1530002690	S.TRANSISTOR	2SC4116-GR (TE85R)
Q116	1590001450	S.FET	2SJ144-GR (TE85R)
Q117	1590001450	S.FET	2SJ144-GR (TE85R)
Q118	1590000430	S.TRANSISTOR	DTC144EU T107
Q119	1530002690	S.TRANSISTOR	2SC4116-GR (TE85R)
Q122	1530002690	S.TRANSISTOR	2SC4116-GR (TE85R)
Q123	1590000680	S.TRANSISTOR	DTC114EU T107
Q201	1530002060	S.TRANSISTOR	2SC4081 T107 R
Q202	1530002060	S.TRANSISTOR	2SC4081 T107 R
Q204	1590001330	S.TRANSISTOR	DTA114EU T107
Q205	1590001330	S.TRANSISTOR	DTA114EU T107
Q206	1510000770	S.TRANSISTOR	2SA1586-GR (TE85R)
Q207	1590000430	S.TRANSISTOR	DTC144EU T107
Q210	1590000430	S.TRANSISTOR	DTC144EU T107
Q211	1510000770	S.TRANSISTOR	2SA1586-GR (TE85R)
Q212	1530002690	S.TRANSISTOR	2SC4116-GR (TE85R)
Q213	1590000680	S.TRANSISTOR	DTC114EU T107
Q218	1590000430	S.TRANSISTOR	DTC144EU T107
Q219	1590001000	S.TRANSISTOR	RN2427 (TE85R)
Q220	1590001330	S.TRANSISTOR	DTA114EU T107
Q221	1590000430	S.TRANSISTOR	DTC144EU T107
Q222	1590001330	S.TRANSISTOR	DTA114EU T107
Q223	1590001330	S.TRANSISTOR	DTA114EU T107
Q224	1590000430	S.TRANSISTOR	DTC144EU T107
Q226	1590000430	S.TRANSISTOR	DTC144EU T107
Q228	1590000430	S.TRANSISTOR	DTC144EU T107
Q229	1590000430	S.TRANSISTOR	DTC144EU T107
Q230	1590001330	S.TRANSISTOR	DTA114EU T107
Q231	1590000430	S.TRANSISTOR	DTC144EU T107
Q232	1590001330	S.TRANSISTOR	DTA114EU T107
Q233	1590000430	S.TRANSISTOR	DTC144EU T107
Q234	1590001330	S.TRANSISTOR	DTA114EU T107
Q236	1590000430	S.TRANSISTOR	DTC144EU T107
Q237	1590000430	S.TRANSISTOR	DTC144EU T107
Q238	1590000430	S.TRANSISTOR	DTC144EU T107
Q239	1590001330	S.TRANSISTOR	DTA114EU T107
Q240	1590000430	S.TRANSISTOR	DTC144EU T107
Q241	1590000430	S.TRANSISTOR	DTC144EU T107
Q242	1590000430	S.TRANSISTOR	DTC144EU T107
Q243	1590000680	S.TRANSISTOR	DTC114EU T107
Q244	1590000430	S.TRANSISTOR	DTC144EU T107
Q245	1590001330	S.TRANSISTOR	DTA114EU T107
Q246	1590000430	S.TRANSISTOR	DTC144EU T107
Q247	1590000430	S.TRANSISTOR	DTC144EU T107
Q248	1590000430	S.TRANSISTOR	DTC144EU T107
Q249	1590001330	S.TRANSISTOR	DTA114EU T107
Q250	1590001330	S.TRANSISTOR	DTA114EU T107
Q251	1590000430	S.TRANSISTOR	DTC144EU T107
Q252	1560000560	S.FET	2SK882-GR (TE85L)
Q253	1510000770	S.TRANSISTOR	2SA1586-GR (TE85R)
Q254	1560000560	S.FET	2SK882-GR (TE85L)
Q255	1530002690	S.TRANSISTOR	2SC4116-GR (TE85R)
Q256	1530002690	S.TRANSISTOR	2SC4116-GR (TE85R)
Q257	1590001600	S.TRANSISTOR	UMD3 TL

[MAIN UNIT]

REF. NO.	ORDER NO.	DESCRIPTION	
Q258	1590000680	S.TRANSISTOR	DTC114EU T107
Q259	1530002690	S.TRANSISTOR	2SC4116-GR (TE85R)
Q260	1590000430	S.TRANSISTOR	DTC144EU T107
Q261	1590001330	S.TRANSISTOR	DTA114EU T107
Q262	1590000430	S.TRANSISTOR	DTC144EU T107
Q263	1590000430	S.TRANSISTOR	DTC144EU T107
Q264	1590000430	S.TRANSISTOR	DTC144EU T107
D1	1790000620	S.DIODE	MA77(TW)
D2	1790000620	S.DIODE	MA77(TW)
D3	1790000620	S.DIODE	MA77(TW)
D4	1790000620	S.DIODE	MA77(TW)
D5	1790000620	S.DIODE	MA77(TW)
D6	1790000620	S.DIODE	MA77(TW)
D7	1790000620	S.DIODE	MA77(TW)
D8	1790000620	S.DIODE	MA77(TW)
D9	1790000620	S.DIODE	MA77(TW)
D10	1790000620	S.DIODE	MA77(TW)
D11	1750000550	S.DIODE	1SS355 TE-17
D12	1790000450	S.DIODE	MA862(TX)
D13	1720000360	S.DIODE	HSU88TRF
D14	1750000110	S.DIODE	1SS272 (TE85R)
D15	1750000550	S.DIODE	1SS355 TE-17
D17	1790000490	S.DIODE	HSM88AS-TR
D18	1790000450	S.DIODE	MA862(TX)
D19	1790000620	S.DIODE	MA77(TW)
D20	1790000620	S.DIODE	MA77(TW)
D21	1790000620	S.DIODE	MA77(TW)
D22	1720000270	S.VARICAP	1SV217 (TPH2)
D23	1790000620	S.DIODE	MA77(TW)
D24	1790000450	S.DIODE	MA862(TX)
D25	1750000550	S.DIODE	1SS355 TE-17
D26	1750000110	S.DIODE	1SS272 (TE85R)
D27	1750000550	S.DIODE	1SS355 TE-17
D28	1750000110	S.DIODE	1SS272 (TE85R)
D29	1750000110	S.DIODE	1SS272 (TE85R)
D30	1750000110	S.DIODE	1SS272 (TE85R)
D31	1750000110	S.DIODE	1SS272 (TE85R)
D32	1750000550	S.DIODE	1SS355 TE-17
D33	1750000110	S.DIODE	1SS272 (TE85R)
D34	1730000730	S.ZENER	RD6.2M-T2B2
D35	1790000490	S.DIODE	HSM88AS-TR
D36	1790000620	S.DIODE	MA77(TW)
D37	1790000620	S.DIODE	MA77(TW)
D38	1790000620	S.DIODE	MA77(TW)
D41	1790000660	S.DIODE	MA728(TW)
D44	1790000490	S.DIODE	HSM88AS-TR
D45	1750000550	S.DIODE	1SS355 TE-17
D46	1750000550	S.DIODE	1SS355 TE-17
D47	1750000550	S.DIODE	1SS355 TE-17
D48	1750000550	S.DIODE	1SS355 TE-17
D49	1750000550	S.DIODE	1SS355 TE-17
D50	1750000550	S.DIODE	1SS355 TE-17
D53	1790000490	S.DIODE	HSM88AS-TR
D54	1730000730	S.ZENER	RD6.2M-T2B2
D55	1790000490	S.DIODE	HSM88AS-TR
D56	1790000450	S.DIODE	MA862(TX)
D61	1750000550	S.DIODE	1SS355 TE-17
D62	1750000550	S.DIODE	1SS355 TE-17
D64	1730000410	S.ZENER	RD5.1M-T2B2
D65	1750000110	S.DIODE	1SS272 (TE85R)
D67	1790000450	S.DIODE	MA862(TX)
D68	1790000660	S.DIODE	MA728(TW)
D70	1790000660	S.DIODE	MA728(TW)
D73	1790000490	S.DIODE	HSM88AS-TR
D74	1750000110	S.DIODE	1SS272 (TE85R)
D75	1750000110	S.DIODE	1SS272 (TE85R)
D76	1750000550	S.DIODE	1SS355 TE-17
D77	1750000110	S.DIODE	1SS272 (TE85R)
D79	1750000550	S.DIODE	1SS355 TE-17
D80	1750000550	S.DIODE	1SS355 TE-17
D82	1750000550	S.DIODE	1SS355 TE-17
D83	1750000550	S.DIODE	1SS355 TE-17
D85	1750000550	S.DIODE	1SS355 TE-17
D88	1730000850	S.ZENER	RD9.1M-T2B3

S.=Surface mount

Downloaded from www.Manualslib.com manuals search engine

[MAIN UNIT]

REF. NO.	ORDER NO.	DESCRIPTION	
D89	1750000550	S.DIODE	1SS355 TE-17
D90	1750000550	S.DIODE	1SS355 TE-17
D91	1750000550	S.DIODE	1SS355 TE-17
D92	1730001060	S.ZENER	RD20M-T2B2
D102	1790000660	S.DIODE	MA728(TW)
D105	1790000620	S.DIODE	MA77(TW)
D106	1790000620	S.DIODE	MA77(TW)
D107	1790000620	S.DIODE	MA77(TW)
D108	1790000620	S.DIODE	MA77(TW)
D109	1790000620	S.DIODE	MA77(TW)
D110	1790000620	S.DIODE	MA77(TW)
D111	1790000620	S.DIODE	MA77(TW)
D112	1790000620	S.DIODE	MA77(TW)
D113	1790000620	S.DIODE	MA77(TW)
D115	1750000550	S.DIODE	1SS355 TE-17
D116	1790000490	S.DIODE	HSM88AS-TR
D117	1750000550	S.DIODE	1SS355 TE-17
D118	1750000550	S.DIODE	1SS355 TE-17
D120	1790000450	S.DIODE	MA862(TX)
D121	1790000450	S.DIODE	MA862(TX)
D122	1750000550	S.DIODE	1SS355 TE-17
FI1	2010001080	FILTER	10M22D6 (FL-128)
FI2	2010001730	FILTER	FL-211 (10.850 MHz)
FI3	2020001020	CERAMIC	SFH455E
FI4	2020001020	CERAMIC	SFH455E
FI5	2010001090	FILTER	10M22D7 (FL-129)
FI6	2010001740	FILTER	FL-212 (10.950 MHz)
X1	6050008700	XTAL	CR-451 (10.8550 MHz)
X2	6070000090	DISCRIMINATOR	CDB455C16
X4	6070000090	DISCRIMINATOR	CDB455C16
L1	6150004200	COIL	LS-479
L2	6150004170	COIL	LS-476
L3	6200003260	S.COIL	NL 322522T-101J
L4	6200003950	S.COIL	HF50ACC 322513-T
L7	6200003590	S.COIL	EXCCL3225U1
L8	6150000950	COIL	LS-110A
L9	6200003260	S.COIL	NL 322522T-101J
L10	6150004170	COIL	LS-476
L11	6150004210	COIL	LS-480
L12	6150004210	COIL	LS-480
L13	6150004170	COIL	LS-476
L14	6200001830	S.COIL	NL 322522T-100J
L15	6200003260	S.COIL	NL 322522T-101J
L16	6200001830	S.COIL	NL 322522T-100J
L17	6200003130	S.COIL	NL 322522T-120J
L18	6150002040	COIL	LS-256
L19	6200003260	S.COIL	NL 322522T-101J
L20	6200003260	S.COIL	NL 322522T-101J
L21	6200003260	S.COIL	NL 322522T-101J
L22	6200001830	S.COIL	NL 322522T-100J
L25	6150004200	COIL	LS-479
L26	6200003260	S.COIL	NL 322522T-101J
L27	6150004210	COIL	LS-480
L28	6150004170	COIL	LS-476
L29	6200003260	S.COIL	NL 322522T-101J
L30	6200003260	S.COIL	NL 322522T-101J
L32	6200003950	S.COIL	HF50ACC 322513-T
L33	6200003950	S.COIL	HF50ACC 322513-T
L34	6200003260	S.COIL	NL 322522T-101J
L38	6150004200	COIL	LS-479
L39	6200003260	S.COIL	NL 322522T-101J
L40	6150004210	COIL	LS-480
L41	6150004170	COIL	LS-476
L42	6200003260	S.COIL	NL 322522T-101J
L43	6200003260	S.COIL	NL 322522T-101J
L45	6200003260	S.COIL	NL 322522T-101J
L46	6150004210	COIL	LS-480
L47	6150004210	COIL	LS-480
L48	6150004170	COIL	LS-476
L52	6200003260	S.COIL	NL 322522T-101J

[MAIN UNIT]

REF. NO.	ORDER NO.	DESCRIPTION	
L53	6200003260	S.COIL	NL 322522T-101J
L54	6170000140	COIL	LW-15
L56	6200003590	S.COIL	EXCCL3225U1
L57	6200003590	S.COIL	EXCCL3225U1
L58	6200003950	S.COIL	HF50ACC 322513-T
L59	6200003590	S.COIL	EXCCL3225U1
L60	6200003950	S.COIL	HF50ACC 322513-T
L61	6200003950	S.COIL	HF50ACC 322513-T
L62	6200003950	S.COIL	HF50ACC 322513-T
L63	6200003950	S.COIL	HF50ACC 322513-T
L64	6200003950	S.COIL	HF50ACC 322513-T
L65	6200003950	S.COIL	HF50ACC 322513-T
L66	6200003260	S.COIL	NL 322522T-101J
L67	6200001830	S.COIL	NL 322522T-100J
L69	6200003950	S.COIL	HF50ACC 322513-T
L70	6200003950	S.COIL	HF50ACC 322513-T
L102	6200006380	S.COIL	ELJFC 150K 15U
L103	6200006380	S.COIL	ELJFC 150K 15U
L104	6200006380	S.COIL	ELJFC 150K 15U
L105	6200003330	S.COIL	NL 322522T-1R0J-3
L106	6200003330	S.COIL	NL 322522T-1R0J-3
L108	6200001830	S.COIL	NL 322522T-100J
L109	6200003260	S.COIL	NL 322522T-101J
L110	6150004170	COIL	LS-476
L111	6200003260	S.COIL	NL 322522T-101J
L112	6200006380	S.COIL	ELJFC 150K 15U
L113	6200006380	S.COIL	ELJFC 150K 15U
L114	6200006380	S.COIL	ELJFC 150K 15U
L115	6200003330	S.COIL	NL 322522T-1R0J-3
L116	6200003330	S.COIL	NL 322522T-1R0J-3
L118	6150000950	COIL	LS-110A
L119	6200003260	S.COIL	NL 322522T-101J
L120	6200001830	S.COIL	NL 322522T-100J
L121	6200002960	S.COIL	NL 322522T-4R7J-3
L122	6200003240	S.COIL	NL 322522T-221J
L123	6200006430	S.COIL	ELJFC 180K-F
L124	6200004920	S.COIL	MLF1608A 2R2K-T
L125	6200006430	S.COIL	ELJFC 180K-F
L126	6200004920	S.COIL	MLF1608A 2R2K-T
R1	7030003480	S.RESISTOR	ERJ3GEYJ 222 V (2.2 kΩ)
R2	7310002740	S.TRIMMER	RV-150 (RH03A3A14X0FC)103
R3	7030003320	S.RESISTOR	ERJ3GEYJ 101 V (100 Ω)
R4	7030003270	S.RESISTOR	ERJ3GEYJ 390 V (39 Ω)
R6	7510000910	S.THERMISTOR	NTCCF2012 4AH 473KC-T
R7	7030003600	S.RESISTOR	ERJ3GEYJ 223 V (22 kΩ)
R8	7030003500	S.RESISTOR	ERJ3GEYJ 332 V (3.3 kΩ)
R9	7030003560	S.RESISTOR	ERJ3GEYJ 103 V (10 kΩ)
R10	7030003360	S.RESISTOR	ERJ3GEYJ 221 V (220 Ω)
R11	7030003520	S.RESISTOR	ERJ3GEYJ 472 V (4.7 kΩ)
R12	7030003480	S.RESISTOR	ERJ3GEYJ 222 V (2.2 kΩ)
R13	7030003520	S.RESISTOR	ERJ3GEYJ 472 V (4.7 kΩ)
R14	7030003520	S.RESISTOR	ERJ3GEYJ 472 V (4.7 kΩ)
R15	7030003460	S.RESISTOR	ERJ3GEYJ 152 V (1.5 kΩ)
R16	7030003320	S.RESISTOR	ERJ3GEYJ 101 V (100 Ω)
R17	7030003480	S.RESISTOR	ERJ3GEYJ 222 V (2.2 kΩ)
R18	7030003430	S.RESISTOR	ERJ3GEYJ 821 V (820 Ω)
R19	7030003320	S.RESISTOR	ERJ3GEYJ 101 V (100 Ω)
R20	7030003520	S.RESISTOR	ERJ3GEYJ 472 V (4.7 kΩ)
R21	7030003440	S.RESISTOR	ERJ3GEYJ 102 V (1 kΩ)
R22	7030003320	S.RESISTOR	ERJ3GEYJ 101 V (100 Ω)
R23	7030003480	S.RESISTOR	ERJ3GEYJ 222 V (2.2 kΩ)
R24	7030003440	S.RESISTOR	ERJ3GEYJ 102 V (1 kΩ)
R25	7030003520	S.RESISTOR	ERJ3GEYJ 472 V (4.7 kΩ)
R26	7030003520	S.RESISTOR	ERJ3GEYJ 472 V (4.7 kΩ)
R27	7510000830	S.THERMISTOR	NTCCF2012 3EH 471KC-T
R28	7030003480	S.RESISTOR	ERJ3GEYJ 222 V (2.2 kΩ)
R29	7310002720	S.TRIMMER	RV-148 (RH03A3AS3X0DA)472
R30	7030003660	S.RESISTOR	ERJ3GEYJ 683 V (68 kΩ)
R31	7030003660	S.RESISTOR	ERJ3GEYJ 683 V (68 kΩ)
R32	7030003660	S.RESISTOR	ERJ3GEYJ 683 V (68 kΩ)
R33	7030003560	S.RESISTOR	ERJ3GEYJ 103 V (10 kΩ)
R34	7030003480	S.RESISTOR	ERJ3GEYJ 222 V (2.2 kΩ)

S.=Surface mount

Downloaded from www.Manualslib.com manuals search engine

[MAIN UNIT]

REF. NO.	ORDER NO.	DESCRIPTION	
R35	7030003710	S.RESISTOR	ERJ3GEYJ 184 V (180 kΩ)
R36	7030003440	S.RESISTOR	ERJ3GEYJ 102 V (1 kΩ)
R37	7030003640	S.RESISTOR	ERJ3GEYJ 473 V (47 kΩ)
R38	7030003630	S.RESISTOR	ERJ3GEYJ 393 V (39 kΩ)
R39	7030003500	S.RESISTOR	ERJ3GEYJ 332 V (3.3 kΩ)
R40	7030003320	S.RESISTOR	ERJ3GEYJ 101 V (100 Ω)
R41	7310002740	S.TRIMMER	RV-150
			(RH03A3A14X0FC)103
R43	7030003320	S.RESISTOR	ERJ3GEYJ 101 V (100 Ω)
R44	7030003450	S.RESISTOR	ERJ3GEYJ 122 V (1.2 kΩ)
R45	7030003360	S.RESISTOR	ERJ3GEYJ 221 V (220 Ω)
R46	7030003560	S.RESISTOR	ERJ3GEYJ 103 V (10 kΩ)
R47	7030003640	S.RESISTOR	ERJ3GEYJ 473 V (47 kΩ)
R48	7030003560	S.RESISTOR	ERJ3GEYJ 103 V (10 kΩ)
R49	7030003610	S.RESISTOR	ERJ3GEYJ 273 V (27 kΩ)
R50	7030003550	S.RESISTOR	ERJ3GEYJ 822 V (8.2 kΩ)
R51	7030003520	S.RESISTOR	ERJ3GEYJ 472 V (4.7 kΩ)
R52	7030003440	S.RESISTOR	ERJ3GEYJ 102 V (1 kΩ)
R53	7030003580	S.RESISTOR	ERJ3GEYJ 153 V (15 kΩ)
R54	7030003600	S.RESISTOR	ERJ3GEYJ 223 V (22 kΩ)
R55	7030003560	S.RESISTOR	ERJ3GEYJ 103 V (10 kΩ)
R58	7030003320	S.RESISTOR	ERJ3GEYJ 101 V (100 Ω)
R59	7030003480	S.RESISTOR	ERJ3GEYJ 222 V (2.2 kΩ)
R60	7030003560	S.RESISTOR	ERJ3GEYJ 103 V (10 kΩ)
R61	7030003760	S.RESISTOR	ERJ3GEYJ 474 V (470 kΩ)
R62	7030003640	S.RESISTOR	ERJ3GEYJ 473 V (47 kΩ)
R63	7030003580	S.RESISTOR	ERJ3GEYJ 153 V (15 kΩ)
			[EUR], [SWE]
R63	7030003680	S.RESISTOR	ERJ3GEYJ 104 V (100 kΩ)
			[USA], [AUS]
R64	7310002600	S.TRIMMER	RV-110
			(RH03A3AS4X0AA)473
			[EUR], [SWE]
R64	7310002720	S.TRIMMER	RV-148
			(RH03A3AS3X0DA)472
			[USA], [AUS]
R65	7030003580	S.RESISTOR	ERJ3GEYJ 153 V (15 kΩ)
			[USA], [AUS]
R65	7030004050	S.RESISTOR	ERJ3GEYJ 1R0 V (1 Ω)
			[EUR], [SWE]
R66	7310002600	S.TRIMMER	RV-110
			(RH03A3AS4X0AA)473
			[EUR], [SWE]
R66	7310002760	S.TRIMMER	RV-152
			(RH03A3AJ4X0HA)223
			[USA], [AUS]
R67	7030003340	S.RESISTOR	ERJ3GEYJ 151 V (150 Ω)
R68	7030003400	S.RESISTOR	ERJ3GEYJ 471 V (470 Ω)
R69	7030003840	S.RESISTOR	ERJ3GEYJ 225 V (2.2 MΩ)
R70	7030003760	S.RESISTOR	ERJ3GEYJ 474 V (470 kΩ)
R71	7030003520	S.RESISTOR	ERJ3GEYJ 472 V (4.7 kΩ)
R72	7310002760	S.TRIMMER	RV-152
			(RH03A3AJ4X0HA)223
R73	7030003590	S.RESISTOR	ERJ3GEYJ 183 V (18 kΩ)
R74	7030003430	S.RESISTOR	ERJ3GEYJ 821 V (820 Ω)
R76	7030003760	S.RESISTOR	ERJ3GEYJ 474 V (470 kΩ)
R77	7510000870	S.THERMISTOR	NTCCF2012 3FH 332KC-T
R78	7030003640	S.RESISTOR	ERJ3GEYJ 473 V (47 kΩ)
R79	7030003640	S.RESISTOR	ERJ3GEYJ 473 V (47 kΩ)
R80	7310002760	S.TRIMMER	RV-152
			(RH03A3AJ4X0HA)223
R81	7030003620	S.RESISTOR	ERJ3GEYJ 333 V (33 kΩ)
R82	7030003640	S.RESISTOR	ERJ3GEYJ 473 V (47 kΩ)
R83	7030003760	S.RESISTOR	ERJ3GEYJ 474 V (470 kΩ)
R84	7510000870	S.THERMISTOR	NTCCF2012 3FH 332KC-T
R85	7030003640	S.RESISTOR	ERJ3GEYJ 473 V (47 kΩ)
R86	7030003640	S.RESISTOR	ERJ3GEYJ 473 V (47 kΩ)
R87	7310002760	S.TRIMMER	RV-152
			(RH03A3AJ4X0HA)223
R88	7030003620	S.RESISTOR	ERJ3GEYJ 333 V (33 kΩ)
R89	7030003640	S.RESISTOR	ERJ3GEYJ 473 V (47 kΩ)
R90	7030003640	S.RESISTOR	ERJ3GEYJ 473 V (47 kΩ)
R91	7030003440	S.RESISTOR	ERJ3GEYJ 102 V (1 kΩ)
R92	7310002720	S.TRIMMER	RV-148
			(RH03A3AS3X0DA)472
R93	7030003460	S.RESISTOR	ERJ3GEYJ 152 V (1.5 kΩ)

[MAIN UNIT]

REF. NO.	ORDER NO.	DESCRIPTION	
R94	7030003560	S.RESISTOR	ERJ3GEYJ 103 V (10 kΩ)
R95	7030003760	S.RESISTOR	ERJ3GEYJ 474 V (470 kΩ)
R96	7030004710	S.RESISTOR	ERJ3GEYJ 475 V (4.7 MΩ)
R97	7030003800	S.RESISTOR	ERJ3GEYJ 105 V (1 MΩ)
R98	7030003340	S.RESISTOR	ERJ3GEYJ 151 V (150 Ω)
R99	7030003490	S.RESISTOR	ERJ3GEYJ 272 V (2.7 kΩ)
R101	7030003800	S.RESISTOR	ERJ3GEYJ 105 V (1 MΩ)
R102	7030003800	S.RESISTOR	ERJ3GEYJ 105 V (1 MΩ)
R103	7030003800	S.RESISTOR	ERJ3GEYJ 105 V (1 MΩ)
R104	7030003630	S.RESISTOR	ERJ3GEYJ 393 V (39 kΩ)
R105	7310002770	S.TRIMMER	RV-153
			(RH03A3AN4X02A)333
R106	7030003620	S.RESISTOR	ERJ3GEYJ 333 V (33 kΩ)
R107	7030003680	S.RESISTOR	ERJ3GEYJ 104 V (100 kΩ)
R108	7030003520	S.RESISTOR	ERJ3GEYJ 472 V (4.7 kΩ)
R109	7030003320	S.RESISTOR	ERJ3GEYJ 101 V (100 Ω)
R110	7030003640	S.RESISTOR	ERJ3GEYJ 473 V (47 kΩ)
R111	7030003480	S.RESISTOR	ERJ3GEYJ 222 V (2.2 kΩ)
R112	7030003680	S.RESISTOR	ERJ3GEYJ 104 V (100 kΩ)
R113	7030003520	S.RESISTOR	ERJ3GEYJ 472 V (4.7 kΩ)
R114	7030003320	S.RESISTOR	ERJ3GEYJ 101 V (100 Ω)
R115	7030003760	S.RESISTOR	ERJ3GEYJ 474 V (470 kΩ)
R116	7030003640	S.RESISTOR	ERJ3GEYJ 473 V (47 kΩ)
R117	7030003530	S.RESISTOR	ERJ3GEYJ 562 V (5.6 kΩ)
R118	7030003340	S.RESISTOR	ERJ3GEYJ 151 V (150 Ω)
R119	7030003400	S.RESISTOR	ERJ3GEYJ 471 V (470 Ω)
R120	7030003280	S.RESISTOR	ERJ3GEYJ 470 V (47 Ω)
R121	7030003640	S.RESISTOR	ERJ3GEYJ 473 V (47 kΩ)
R122	7030003640	S.RESISTOR	ERJ3GEYJ 473 V (47 kΩ)
R123	7030003480	S.RESISTOR	ERJ3GEYJ 222 V (2.2 kΩ)
R124	7030003480	S.RESISTOR	ERJ3GEYJ 222 V (2.2 kΩ)
R125	7030003480	S.RESISTOR	ERJ3GEYJ 222 V (2.2 kΩ)
R126	7030003240	S.RESISTOR	ERJ3GEYJ 220 V (22 Ω)
R127	7030003510	S.RESISTOR	ERJ3GEYJ 392 V (3.9 kΩ)
R128	7030003680	S.RESISTOR	ERJ3GEYJ 104 V (100 kΩ)
R129	7030003760	S.RESISTOR	ERJ3GEYJ 474 V (470 kΩ)
R130	7030003320	S.RESISTOR	ERJ3GEYJ 101 V (100 Ω)
R131	7510000830	S.THERMISTOR	NTCCF2012 3EH 471KC-T
R132	7030003330	S.RESISTOR	ERJ3GEYJ 121 V (120 Ω)
R133	7030003560	S.RESISTOR	ERJ3GEYJ 103 V (10 kΩ)
R134	7030003560	S.RESISTOR	ERJ3GEYJ 103 V (10 kΩ)
R135	7030003520	S.RESISTOR	ERJ3GEYJ 472 V (4.7 kΩ)
R136	7310002690	S.TRIMMER	RV-145
			(RH03A3A13X0CA)102
R137	7030003360	S.RESISTOR	ERJ3GEYJ 221 V (220 Ω)
R138	7030003440	S.RESISTOR	ERJ3GEYJ 102 V (1 kΩ)
R139	7030003600	S.RESISTOR	ERJ3GEYJ 223 V (22 kΩ)
R140	7030003500	S.RESISTOR	ERJ3GEYJ 332 V (3.3 kΩ)
R141	7030003600	S.RESISTOR	ERJ3GEYJ 223 V (22 kΩ)
R142	7510000890	S.THERMISTOR	NTCCF2012 3NH 153KC-T
R143	7030003560	S.RESISTOR	ERJ3GEYJ 103 V (10 kΩ)
R144	7030003610	S.RESISTOR	ERJ3GEYJ 273 V (27 kΩ)
R145	7030003520	S.RESISTOR	ERJ3GEYJ 472 V (4.7 kΩ)
R146	7030003760	S.RESISTOR	ERJ3GEYJ 474 V (470 kΩ)
R147	7030003480	S.RESISTOR	ERJ3GEYJ 222 V (2.2 kΩ)
R148	7030003600	S.RESISTOR	ERJ3GEYJ 223 V (22 kΩ)
R149	7030003610	S.RESISTOR	ERJ3GEYJ 273 V (27 kΩ)
R150	7030003460	S.RESISTOR	ERJ3GEYJ 152 V (1.5 kΩ)
R151	7030003480	S.RESISTOR	ERJ3GEYJ 222 V (2.2 kΩ)
R152	7030003520	S.RESISTOR	ERJ3GEYJ 472 V (4.7 kΩ)
R153	7030003520	S.RESISTOR	ERJ3GEYJ 472 V (4.7 kΩ)
R154	7030003480	S.RESISTOR	ERJ3GEYJ 222 V (2.2 kΩ)
R155	7030003720	S.RESISTOR	ERJ3GEYJ 224 V (220 kΩ)
R156	7310002740	S.TRIMMER	RV-150
			(RH03A3A14X0FC)103
R157	7030003720	S.RESISTOR	ERJ3GEYJ 224 V (220 kΩ)
R158	7310002740	S.TRIMMER	RV-150
			(RH03A3A14X0FC)103
R159	7030003440	S.RESISTOR	ERJ3GEYJ 102 V (1 kΩ)
R165	7030003640	S.RESISTOR	ERJ3GEYJ 473 V (47 kΩ)
R166	7030003640	S.RESISTOR	ERJ3GEYJ 473 V (47 kΩ)
R170	7030003600	S.RESISTOR	ERJ3GEYJ 223 V (22 kΩ)
R171	7030003490	S.RESISTOR	ERJ3GEYJ 272 V (2.7 kΩ)
R172	7030003320	S.RESISTOR	ERJ3GEYJ 101 V (100 Ω)
R173	7030003560	S.RESISTOR	ERJ3GEYJ 103 V (10 kΩ)
R174	7030003560	S.RESISTOR	ERJ3GEYJ 103 V (10 kΩ)

S.=Surface mount

Downloaded from www.Manualslib.com manuals search engine

[MAIN UNIT]

REF. NO.	ORDER NO.	DESCRIPTION	
R175	7030003600	S.RESISTOR	ERJ3GEYJ 223 V (22 kΩ)
R178	7030003560	S.RESISTOR	ERJ3GEYJ 103 V (10 kΩ)
R179	7030003440	S.RESISTOR	ERJ3GEYJ 102 V (1 kΩ)
R180	7030003560	S.RESISTOR	ERJ3GEYJ 103 V (10 kΩ)
R181	7030003520	S.RESISTOR	ERJ3GEYJ 472 V (4.7 kΩ)
R182	7030003440	S.RESISTOR	ERJ3GEYJ 102 V (1 kΩ)
R188	7030003460	S.RESISTOR	ERJ3GEYJ 152 V (1.5 kΩ)
R189	7030003640	S.RESISTOR	ERJ3GEYJ 473 V (47 kΩ)
R190	7030003470	S.RESISTOR	ERJ3GEYJ 182 V (1.8 kΩ)
R192	7030003340	S.RESISTOR	ERJ3GEYJ 151 V (150 Ω)
R194	7030003770	S.RESISTOR	ERJ3GEYJ 564 V (560 kΩ)
R195	7030003440	S.RESISTOR	ERJ3GEYJ 102 V (1 kΩ)
R198	7030003440	S.RESISTOR	ERJ3GEYJ 102 V (1 kΩ)
R199	7030003440	S.RESISTOR	ERJ3GEYJ 102 V (1 kΩ)
R200	7030003520	S.RESISTOR	ERJ3GEYJ 472 V (4.7 kΩ)
R201	7030003540	S.RESISTOR	ERJ3GEYJ 682 V (6.8 kΩ)
R210	7030003760	S.RESISTOR	ERJ3GEYJ 474 V (470 kΩ)
R211	7030003790	S.RESISTOR	ERJ3GEYJ 824 V (820 kΩ)
R213	7030003560	S.RESISTOR	ERJ3GEYJ 103 V (10 kΩ)
R214	7030003560	S.RESISTOR	ERJ3GEYJ 103 V (10 kΩ)
R215	7030003560	S.RESISTOR	ERJ3GEYJ 103 V (10 kΩ)
R216	7030003560	S.RESISTOR	ERJ3GEYJ 103 V (10 kΩ)
R217	7030003600	S.RESISTOR	ERJ3GEYJ 223 V (22 kΩ)
R218	7030003510	S.RESISTOR	ERJ3GEYJ 392 V (3.9 kΩ)
R219	7030003800	S.RESISTOR	ERJ3GEYJ 105 V (1 MΩ)
R220	7030003800	S.RESISTOR	ERJ3GEYJ 105 V (1 MΩ)
R221	7030003560	S.RESISTOR	ERJ3GEYJ 103 V (10 kΩ)
R223	7030003520	S.RESISTOR	ERJ3GEYJ 472 V (4.7 kΩ)
R224	7030003640	S.RESISTOR	ERJ3GEYJ 473 V (47 kΩ)
R225	7030003440	S.RESISTOR	ERJ3GEYJ 102 V (1 kΩ)
R226	7030003560	S.RESISTOR	ERJ3GEYJ 103 V (10 kΩ)
R227	7030003560	S.RESISTOR	ERJ3GEYJ 103 V (10 kΩ)
R228	7030003480	S.RESISTOR	ERJ3GEYJ 222 V (2.2 kΩ)
R229	7030003480	S.RESISTOR	ERJ3GEYJ 222 V (2.2 kΩ)
R230	7310002740	S.TRIMMER	RV-150 (RH03A3A14X0FC)103
R231	7030003480	S.RESISTOR	ERJ3GEYJ 222 V (2.2 kΩ)
R232	7030003640	S.RESISTOR	ERJ3GEYJ 473 V (47 kΩ)
R233	7030003400	S.RESISTOR	ERJ3GEYJ 471 V (470 Ω)
R234	7030003490	S.RESISTOR	ERJ3GEYJ 272 V (2.7 kΩ)
R235	7030003330	S.RESISTOR	ERJ3GEYJ 121 V (120 Ω)
R236	7030003320	S.RESISTOR	ERJ3GEYJ 101 V (100 Ω)
R237	7510000890	S.THERMISTOR	NTCCF2012 3NH 153KC-T
R239	7310002600	S.TRIMMER	RV-110 (RH03A3AS4X0AA)473
R240	7030003640	S.RESISTOR	ERJ3GEYJ 473 V (47 kΩ)
R241	7030003400	S.RESISTOR	ERJ3GEYJ 471 V (470 Ω)
R242	7030003320	S.RESISTOR	ERJ3GEYJ 101 V (100 Ω)
R243	7030003330	S.RESISTOR	ERJ3GEYJ 121 V (120 Ω)
R244	7030003680	S.RESISTOR	ERJ3GEYJ 104 V (100 kΩ)
R245	7030003580	S.RESISTOR	ERJ3GEYJ 153 V (15 kΩ)
R246	7030003320	S.RESISTOR	ERJ3GEYJ 101 V (100 Ω)
R254	7030003320	S.RESISTOR	ERJ3GEYJ 101 V (100 Ω)
R255	7030003500	S.RESISTOR	ERJ3GEYJ 332 V (3.3 kΩ)
R256	7030003590	S.RESISTOR	ERJ3GEYJ 183 V (18 kΩ)
R257	7030003600	S.RESISTOR	ERJ3GEYJ 223 V (22 kΩ)
R258	7030003560	S.RESISTOR	ERJ3GEYJ 103 V (10 kΩ)
R264	7030003600	S.RESISTOR	ERJ3GEYJ 223 V (22 kΩ)
R265	7030004710	S.RESISTOR	ERJ3GEYJ 475 V (4.7 MΩ)
R266	7030003820	S.RESISTOR	ERJ3GEYJ 155 V (1.5 MΩ)
R270	7030003840	S.RESISTOR	ERJ3GEYJ 225 V (2.2 MΩ)
R271	7030003440	S.RESISTOR	ERJ3GEYJ 102 V (1 kΩ)
R272	7030003600	S.RESISTOR	ERJ3GEYJ 223 V (22 kΩ)
R273	7030003600	S.RESISTOR	ERJ3GEYJ 223 V (22 kΩ)
R274	7030003560	S.RESISTOR	ERJ3GEYJ 103 V (10 kΩ)
R275	7030003800	S.RESISTOR	ERJ3GEYJ 105 V (1 MΩ)
R276	7030003560	S.RESISTOR	ERJ3GEYJ 103 V (10 kΩ)
R277	7030003560	S.RESISTOR	ERJ3GEYJ 103 V (10 kΩ)
R279	7030003480	S.RESISTOR	ERJ3GEYJ 222 V (2.2 kΩ)
R280	7030003600	S.RESISTOR	ERJ3GEYJ 223 V (22 kΩ)
R281	7030003600	S.RESISTOR	ERJ3GEYJ 223 V (22 kΩ)
R282	7030003640	S.RESISTOR	ERJ3GEYJ 473 V (47 kΩ)
R283	7030003640	S.RESISTOR	ERJ3GEYJ 473 V (47 kΩ)
R286	7030003560	S.RESISTOR	ERJ3GEYJ 103 V (10 kΩ)
R287	7030003600	S.RESISTOR	ERJ3GEYJ 223 V (22 kΩ)
R288	7030003560	S.RESISTOR	ERJ3GEYJ 103 V (10 kΩ)

[MAIN UNIT]

REF. NO.	ORDER NO.	DESCRIPTION	
R289	7030003680	S.RESISTOR	ERJ3GEYJ 104 V (100 kΩ)
R290	7030003640	S.RESISTOR	ERJ3GEYJ 473 V (47 kΩ)
R291	7030003560	S.RESISTOR	ERJ3GEYJ 103 V (10 kΩ)
R292	7030003640	S.RESISTOR	ERJ3GEYJ 473 V (47 kΩ)
R293	7030003680	S.RESISTOR	ERJ3GEYJ 104 V (100 kΩ)
R294	7030003590	S.RESISTOR	ERJ3GEYJ 183 V (18 kΩ)
R295	7030003530	S.RESISTOR	ERJ3GEYJ 562 V (5.6 kΩ)
R296	7030003680	S.RESISTOR	ERJ3GEYJ 104 V (100 kΩ)
R300	7030003640	S.RESISTOR	ERJ3GEYJ 473 V (47 kΩ)
R301	7030003640	S.RESISTOR	ERJ3GEYJ 473 V (47 kΩ)
R302	7030003320	S.RESISTOR	ERJ3GEYJ 101 V (100 Ω)
R303	7030003600	S.RESISTOR	ERJ3GEYJ 223 V (22 kΩ)
R304	7030003520	S.RESISTOR	ERJ3GEYJ 472 V (4.7 kΩ)
R305	7030003800	S.RESISTOR	ERJ3GEYJ 105 V (1 MΩ)
R306	7030003800	S.RESISTOR	ERJ3GEYJ 105 V (1 MΩ)
R307	7030003560	S.RESISTOR	ERJ3GEYJ 103 V (10 kΩ)
R308	7310002770	S.TRIMMER	RV-153 (RH03A3AN4X02A)333
R309	7030003640	S.RESISTOR	ERJ3GEYJ 473 V (47 kΩ)
R310	7030003440	S.RESISTOR	ERJ3GEYJ 102 V (1 kΩ)
R311	7030003640	S.RESISTOR	ERJ3GEYJ 473 V (47 kΩ)
R312	7030003680	S.RESISTOR	ERJ3GEYJ 104 V (100 kΩ)
R313	7030003560	S.RESISTOR	ERJ3GEYJ 103 V (10 kΩ)
R314	7030003340	S.RESISTOR	ERJ3GEYJ 151 V (150 Ω)
R315	7030003460	S.RESISTOR	ERJ3GEYJ 152 V (1.5 kΩ)
R316	7030003640	S.RESISTOR	ERJ3GEYJ 473 V (47 kΩ)
R317	7030003470	S.RESISTOR	ERJ3GEYJ 182 V (1.8 kΩ)
R318	7030003560	S.RESISTOR	ERJ3GEYJ 103 V (10 kΩ)
R320	7030003770	S.RESISTOR	ERJ3GEYJ 564 V (560 kΩ)
R321	7030003440	S.RESISTOR	ERJ3GEYJ 102 V (1 kΩ)
R324	7030003640	S.RESISTOR	ERJ3GEYJ 473 V (47 kΩ)
R325	7030003440	S.RESISTOR	ERJ3GEYJ 102 V (1 kΩ)
R326	7030003560	S.RESISTOR	ERJ3GEYJ 103 V (10 kΩ)
R327	7030003560	S.RESISTOR	ERJ3GEYJ 103 V (10 kΩ)
R329	7030003640	S.RESISTOR	ERJ3GEYJ 473 V (47 kΩ)
R335	7030003560	S.RESISTOR	ERJ3GEYJ 103 V (10 kΩ)
R336	7030003560	S.RESISTOR	ERJ3GEYJ 103 V (10 kΩ)
R337	7030003480	S.RESISTOR	ERJ3GEYJ 222 V (2.2 kΩ)
R338	7030003440	S.RESISTOR	ERJ3GEYJ 102 V (1 kΩ)
R352	7030003520	S.RESISTOR	ERJ3GEYJ 472 V (4.7 kΩ)
R353	7030003520	S.RESISTOR	ERJ3GEYJ 472 V (4.7 kΩ)
R354	7030003520	S.RESISTOR	ERJ3GEYJ 472 V (4.7 kΩ)
R355	7030003380	S.RESISTOR	ERJ3GEYJ 331 V (330 Ω)
R356	7030003610	S.RESISTOR	ERJ3GEYJ 273 V (27 kΩ)
R357	7030003440	S.RESISTOR	ERJ3GEYJ 102 V (1 kΩ)
R358	7030003360	S.RESISTOR	ERJ3GEYJ 221 V (220 Ω)
R359	7030003550	S.RESISTOR	ERJ3GEYJ 822 V (8.2 kΩ)
R360	7030003550	S.RESISTOR	ERJ3GEYJ 822 V (8.2 kΩ)
R361	7030003680	S.RESISTOR	ERJ3GEYJ 104 V (100 kΩ)
R362	7030003440	S.RESISTOR	ERJ3GEYJ 102 V (1 kΩ)
R363	7210002460	TRIMMER	EVU-EL0EC7B13
R364	7030003590	S.RESISTOR	ERJ3GEYJ 183 V (18 kΩ)
R365	7030003320	S.RESISTOR	ERJ3GEYJ 101 V (100 Ω)
R366	7030003800	S.RESISTOR	ERJ3GEYJ 105 V (1 MΩ)
R367	7030003440	S.RESISTOR	ERJ3GEYJ 102 V (1 kΩ)
R368	7030003540	S.RESISTOR	ERJ3GEYJ 682 V (6.8 kΩ)
R369	7030003720	S.RESISTOR	ERJ3GEYJ 224 V (220 kΩ)
R370	7210002470	TRIMMER	EVU-EL0EC7B16 1MB
R371	7030003640	S.RESISTOR	ERJ3GEYJ 473 V (47 kΩ)
R372	7030003490	S.RESISTOR	ERJ3GEYJ 272 V (2.7 kΩ)
R373	7030003400	S.RESISTOR	ERJ3GEYJ 471 V (470 Ω)
R374	7030003320	S.RESISTOR	ERJ3GEYJ 101 V (100 Ω)
R375	7030003330	S.RESISTOR	ERJ3GEYJ 121 V (120 Ω)
R376	7510000890	S.THERMISTOR	NTCCF2012 3NH 153KC-T
R378	7310002600	S.TRIMMER	RV-110 (RH03A3AS4X0AA)473
R379	7030003640	S.RESISTOR	ERJ3GEYJ 473 V (47 kΩ)
R380	7030003400	S.RESISTOR	ERJ3GEYJ 471 V (470 Ω)
R381	7030003330	S.RESISTOR	ERJ3GEYJ 121 V (120 Ω)
R382	7030003320	S.RESISTOR	ERJ3GEYJ 101 V (100 Ω)
R383	7030003680	S.RESISTOR	ERJ3GEYJ 104 V (100 kΩ)
R384	7030003580	S.RESISTOR	ERJ3GEYJ 153 V (15 kΩ)
R386	7030003760	S.RESISTOR	ERJ3GEYJ 474 V (470 kΩ)
R387	7030003800	S.RESISTOR	ERJ3GEYJ 105 V (1 MΩ)
R388	7030003320	S.RESISTOR	ERJ3GEYJ 101 V (100 Ω)
R389	7030003600	S.RESISTOR	ERJ3GEYJ 223 V (22 kΩ)

S.=Surface mount

Downloaded from www.Manualslib.com manuals search engine

[MAIN UNIT]

REF. NO.	ORDER NO.	DESCRIPTION	
R391	7030003740	S.RESISTOR	ERJ3GEYJ 334 V (330 kΩ)
R392	7030003500	S.RESISTOR	ERJ3GEYJ 332 V (3.3 kΩ)
R393	7030003590	S.RESISTOR	ERJ3GEYJ 183 V (18 kΩ)
R394	7030003600	S.RESISTOR	ERJ3GEYJ 223 V (22 kΩ)
R395	7030003560	S.RESISTOR	ERJ3GEYJ 103 V (10 kΩ)
R396	7030003620	S.RESISTOR	ERJ3GEYJ 333 V (33 kΩ)
R398	7030003220	S.RESISTOR	ERJ3GEYJ 150 V (15 Ω)
R399	7030003500	S.RESISTOR	ERJ3GEYJ 332 V (3.3 kΩ)
R400	7030006220	S.RESISTOR	ERJ12YJ470H (47 Ω)
R402	7510000920	S.THERMISTOR	NTCCF2012 4CH 104KC-T
R405	7030003610	S.RESISTOR	ERJ3GEYJ 273 V (27 kΩ)
R407	7030003640	S.RESISTOR	ERJ3GEYJ 473 V (47 kΩ)
R408	7030003640	S.RESISTOR	ERJ3GEYJ 473 V (47 kΩ)
R409	7030003480	S.RESISTOR	ERJ3GEYJ 222 V (2.2 kΩ)
R410	7030003240	S.RESISTOR	ERJ3GEYJ 220 V (22 Ω)
R411	7030003480	S.RESISTOR	ERJ3GEYJ 222 V (2.2 kΩ)
R412	7030003680	S.RESISTOR	ERJ3GEYJ 104 V (100 kΩ)
R413	7510000830	S.THERMISTOR	NTCCF2012 3EH 471KC-T
R414	7030003330	S.RESISTOR	ERJ3GEYJ 121 V (120 Ω)
R415	7030003760	S.RESISTOR	ERJ3GEYJ 474 V (470 kΩ)
R416	7030003600	S.RESISTOR	ERJ3GEYJ 223 V (22 kΩ)
R417	7030003320	S.RESISTOR	ERJ3GEYJ 101 V (100 Ω)
R423	7030003600	S.RESISTOR	ERJ3GEYJ 223 V (22 kΩ)
R424	7030004710	S.RESISTOR	ERJ3GEYJ 475 V (4.7 MΩ)
R425	7030003820	S.RESISTOR	ERJ3GEYJ 155 V (1.5 MΩ)
R426	7030003440	S.RESISTOR	ERJ3GEYJ 102 V (1 kΩ)
R427	7030003840	S.RESISTOR	ERJ3GEYJ 225 V (2.2 MΩ)
R429	7030003520	S.RESISTOR	ERJ3GEYJ 472 V (4.7 kΩ)
R431	7030003600	S.RESISTOR	ERJ3GEYJ 223 V (22 kΩ)
R432	7030003560	S.RESISTOR	ERJ3GEYJ 103 V (10 kΩ)
R433	7510000920	S.THERMISTOR	NTCCF2012 4CH 104KC-T
R434	7030003600	S.RESISTOR	ERJ3GEYJ 223 V (22 kΩ)
R436	7030003600	S.RESISTOR	ERJ3GEYJ 223 V (22 kΩ)
R437	7030003640	S.RESISTOR	ERJ3GEYJ 473 V (47 kΩ)
R438	7030003640	S.RESISTOR	ERJ3GEYJ 473 V (47 kΩ)
R442	7030003480	S.RESISTOR	ERJ3GEYJ 222 V (2.2 kΩ)
R443	7030003560	S.RESISTOR	ERJ3GEYJ 103 V (10 kΩ)
R444	7030003560	S.RESISTOR	ERJ3GEYJ 103 V (10 kΩ)
R445	7030003530	S.RESISTOR	ERJ3GEYJ 562 V (5.6 kΩ)
R449	7030003560	S.RESISTOR	ERJ3GEYJ 103 V (10 kΩ)
R450	7030003720	S.RESISTOR	ERJ3GEYJ 224 V (220 kΩ)
R451	7030003360	S.RESISTOR	ERJ3GEYJ 221 V (220 Ω)
R452	7030003640	S.RESISTOR	ERJ3GEYJ 473 V (47 kΩ)
R453	7030003320	S.RESISTOR	ERJ3GEYJ 101 V (100 Ω)
R454	7030003530	S.RESISTOR	ERJ3GEYJ 562 V (5.6 kΩ)
R459	7030003440	S.RESISTOR	ERJ3GEYJ 102 V (1 kΩ)
R460	7030003760	S.RESISTOR	ERJ3GEYJ 474 V (470 kΩ)
R461	7030003600	S.RESISTOR	ERJ3GEYJ 223 V (22 kΩ)
R462	7030003480	S.RESISTOR	ERJ3GEYJ 222 V (2.2 kΩ)
R463	7030003520	S.RESISTOR	ERJ3GEYJ 472 V (4.7 kΩ)
R464	7030003480	S.RESISTOR	ERJ3GEYJ 222 V (2.2 kΩ)
R465	7030003560	S.RESISTOR	ERJ3GEYJ 103 V (10 kΩ)
R466	7030003560	S.RESISTOR	ERJ3GEYJ 103 V (10 kΩ)
R467	7030003520	S.RESISTOR	ERJ3GEYJ 472 V (4.7 kΩ)
R468	7030003640	S.RESISTOR	ERJ3GEYJ 473 V (47 kΩ)
R469	7310000780	TRIMMER	RH0651CS4J25A (473)
R470	7030003690	S.RESISTOR	ERJ3GEYJ 124 V (120 kΩ)
R471	7310000780	TRIMMER	RH0651CS4J25A (473)
R472	7030003640	S.RESISTOR	ERJ3GEYJ 473 V (47 kΩ)
R473	7030003320	S.RESISTOR	ERJ3GEYJ 101 V (100 Ω)
R474	7030003540	S.RESISTOR	ERJ3GEYJ 682 V (6.8 kΩ)
R475	7030003360	S.RESISTOR	ERJ3GEYJ 221 V (220 Ω)
R477	7030003520	S.RESISTOR	ERJ3GEYJ 472 V (4.7 kΩ)
R478	7030003440	S.RESISTOR	ERJ3GEYJ 102 V (1 kΩ)
R479	7030003760	S.RESISTOR	ERJ3GEYJ 474 V (470 kΩ)
R480	7030003600	S.RESISTOR	ERJ3GEYJ 223 V (22 kΩ)
R481	7030003480	S.RESISTOR	ERJ3GEYJ 222 V (2.2 kΩ)
R482	7030003700	S.RESISTOR	ERJ3GEYJ 154 V (150 kΩ)
R483	7510000900	S.THERMISTOR	NTCCF2012 3SH 223KC-T
R484	7030003360	S.RESISTOR	ERJ3GEYJ 221 V (220 Ω)
R485	7030003360	S.RESISTOR	ERJ3GEYJ 221 V (220 Ω)
R486	7030003200	S.RESISTOR	ERJ3GEYJ 100 V (10 Ω)
R487	7030003200	S.RESISTOR	ERJ3GEYJ 100 V (10 Ω)
R488	7030003570	S.RESISTOR	ERJ3GEYJ 123 V (12 kΩ)
R489	7030003740	S.RESISTOR	ERJ3GEYJ 334 V (330 kΩ)
R490	7030003560	S.RESISTOR	ERJ3GEYJ 103 V (10 kΩ)

[MAIN UNIT]

REF. NO.	ORDER NO.	DESCRIPTION	
R491	7030003560	S.RESISTOR	ERJ3GEYJ 103 V (10 kΩ)
R495	7030003460	S.RESISTOR	ERJ3GEYJ 152 V (1.5 kΩ)
R501	7030006220	S.RESISTOR	ERJ12YJ470H (47 Ω)
R502	7030006220	S.RESISTOR	ERJ12YJ470H (47 Ω)
R505	7030003560	S.RESISTOR	ERJ3GEYJ 103 V (10 kΩ)
R506	7030003510	S.RESISTOR	ERJ3GEYJ 392 V (3.9 kΩ)
R507	7030003510	S.RESISTOR	ERJ3GEYJ 392 V (3.9 kΩ)
R508	7030003560	S.RESISTOR	ERJ3GEYJ 103 V (10 kΩ)
R509	7030003480	S.RESISTOR	ERJ3GEYJ 222 V (2.2 kΩ)
R510	7030003480	S.RESISTOR	ERJ3GEYJ 222 V (2.2 kΩ)
R511	7030003520	S.RESISTOR	ERJ3GEYJ 472 V (4.7 kΩ)
R512	7030003560	S.RESISTOR	ERJ3GEYJ 103 V (10 kΩ)
R513	7030003620	S.RESISTOR	ERJ3GEYJ 333 V (33 kΩ)
R514	7030003520	S.RESISTOR	ERJ3GEYJ 472 V (4.7 kΩ)
R515	7030003580	S.RESISTOR	ERJ3GEYJ 153 V (15 kΩ)
R516	7030003680	S.RESISTOR	ERJ3GEYJ 104 V (100 kΩ)
R517	7030003680	S.RESISTOR	ERJ3GEYJ 104 V (100 kΩ)
R519	7030003600	S.RESISTOR	ERJ3GEYJ 223 V (22 kΩ)
R522	7030003580	S.RESISTOR	ERJ3GEYJ 153 V (15 kΩ)
R523	7030003580	S.RESISTOR	ERJ3GEYJ 153 V (15 kΩ)
R524	7030003500	S.RESISTOR	ERJ3GEYJ 332 V (3.3 kΩ)
R529	7030003640	S.RESISTOR	ERJ3GEYJ 473 V (47 kΩ)
R530	7030003640	S.RESISTOR	ERJ3GEYJ 473 V (47 kΩ)
R531	7030003590	S.RESISTOR	ERJ3GEYJ 183 V (18 kΩ)
R532	7030003590	S.RESISTOR	ERJ3GEYJ 183 V (18 kΩ)
R533	7030003440	S.RESISTOR	ERJ3GEYJ 102 V (1 kΩ)
R534	7030003380	S.RESISTOR	ERJ3GEYJ 331 V (330 Ω)
R535	7030003410	S.RESISTOR	ERJ3GEYJ 561 V (560 Ω)
R536	7030003410	S.RESISTOR	ERJ3GEYJ 561 V (560 Ω)
R538	7030003570	S.RESISTOR	ERJ3GEYJ 123 V (12 kΩ)
R539	7030003560	S.RESISTOR	ERJ3GEYJ 103 V (10 kΩ)
R540	7030003490	S.RESISTOR	ERJ3GEYJ 272 V (2.7 kΩ)
R544	7510000930	S.THERMISTOR	NTCCF2012 3NH 103KC-T
R545	7030003520	S.RESISTOR	ERJ3GEYJ 472 V (4.7 kΩ)
R546	7030003640	S.RESISTOR	ERJ3GEYJ 473 V (47 kΩ)
R547	7030003640	S.RESISTOR	ERJ3GEYJ 473 V (47 kΩ)
R548	7030003630	S.RESISTOR	ERJ3GEYJ 393 V (39 kΩ)
R549	7070000540	RESISTOR	CRH200 R-02J 27 Ω
R550	7030004050	S.RESISTOR	ERJ3GEYJ 1R0 V (1 Ω)
R602	7030003440	S.RESISTOR	ERJ3GEYJ 102 V (1 kΩ)
R603	7030003440	S.RESISTOR	ERJ3GEYJ 102 V (1 kΩ)
R604	7030003530	S.RESISTOR	ERJ3GEYJ 562 V (5.6 kΩ)
R605	7030003570	S.RESISTOR	ERJ3GEYJ 123 V (12 kΩ)
R607	7030003640	S.RESISTOR	ERJ3GEYJ 473 V (47 kΩ)
R609	7510000920	S.THERMISTOR	NTCCF2012 4CH 104KC-T
R613	7030003400	S.RESISTOR	ERJ3GEYJ 471 V (470 Ω) [EUR], [SWE]
R613	7030003580	S.RESISTOR	ERJ3GEYJ 153 V (15 kΩ) [USA], [AUS]
R614	7030003340	S.RESISTOR	ERJ3GEYJ 151 V (150 Ω)
R615	7030003280	S.RESISTOR	ERJ3GEYJ 470 V (47 Ω)
R616	7030003280	S.RESISTOR	ERJ3GEYJ 470 V (47 Ω)
R617	7030003690	S.RESISTOR	ERJ3GEYJ 124 V (120 kΩ)
R618	7030003440	S.RESISTOR	ERJ3GEYJ 102 V (1 kΩ)
R620	7030003440	S.RESISTOR	ERJ3GEYJ 102 V (1 kΩ)
R621	7030007200	S.RESISTOR	ERA3YEB 202V
R622	7030007210	S.RESISTOR	ERA3YEB 102V
R623	7030007200	S.RESISTOR	ERA3YEB 202V
R624	7030007210	S.RESISTOR	ERA3YEB 102V
R625	7030007200	S.RESISTOR	ERA3YEB 202V
R626	7030007210	S.RESISTOR	ERA3YEB 102V
R627	7030007200	S.RESISTOR	ERA3YEB 202V
R628	7030007230	S.RESISTOR	ERA3YED 102V
R629	7030007220	S.RESISTOR	ERA3YED 202V
R630	7030007230	S.RESISTOR	ERA3YED 102V
R631	7030007220	S.RESISTOR	ERA3YED 202V
R632	7030007230	S.RESISTOR	ERA3YED 102V
R633	7030007220	S.RESISTOR	ERA3YED 202V
R634	7030007230	S.RESISTOR	ERA3YED 102V
R635	7030007220	S.RESISTOR	ERA3YED 202V
R636	7030007230	S.RESISTOR	ERA3YED 102V
R637	7030007220	S.RESISTOR	ERA3YED 202V
R638	7030007230	S.RESISTOR	ERA3YED 102V
R639	7030007220	S.RESISTOR	ERA3YED 202V
R640	7030007220	S.RESISTOR	ERA3YED 202V
R641	7030003680	S.RESISTOR	ERJ3GEYJ 104 V (100 kΩ)

S.=Surface mount

Downloaded from www.Manualslib.com manuals search engine

[MAIN UNIT]

REF. NO.	ORDER NO.	DESCRIPTION	
R642	7030003720	S.RESISTOR	ERJ3GEYJ 224 V (220 kΩ)
R643	7030003520	S.RESISTOR	ERJ3GEYJ 472 V (4.7 kΩ)
R649	7030003320	S.RESISTOR	ERJ3GEYJ 101 V (100 Ω)
R650	7510000920	S.THERMISTOR	NTCCF2012 4CH 104KC-T
R652	7030003520	S.RESISTOR	ERJ3GEYJ 472 V (4.7 kΩ)
R653	7030003560	S.RESISTOR	ERJ3GEYJ 103 V (10 kΩ)
R654	7030003510	S.RESISTOR	ERJ3GEYJ 392 V (3.9 kΩ)
R656	7030003440	S.RESISTOR	ERJ3GEYJ 102 V (1 kΩ)
R657	7030003440	S.RESISTOR	ERJ3GEYJ 102 V (1 kΩ)
R658	7030003760	S.RESISTOR	ERJ3GEYJ 474 V (470 kΩ)
R659	7030003790	S.RESISTOR	ERJ3GEYJ 824 V (820 kΩ)
R660	7030003740	S.RESISTOR	ERJ3GEYJ 334 V (330 kΩ)
R661	7030003530	S.RESISTOR	ERJ3GEYJ 562 V (5.6 kΩ)
R662	7030003520	S.RESISTOR	ERJ3GEYJ 472 V (4.7 kΩ)
R663	7030003520	S.RESISTOR	ERJ3GEYJ 472 V (4.7 kΩ)
R664	7030003460	S.RESISTOR	ERJ3GEYJ 152 V (1.5 kΩ)
R665	7030003430	S.RESISTOR	ERJ3GEYJ 821 V (820 Ω)
R666	7030003520	S.RESISTOR	ERJ3GEYJ 472 V (4.7 kΩ)
R668	7030003320	S.RESISTOR	ERJ3GEYJ 101 V (100 Ω)
R669	7030003480	S.RESISTOR	ERJ3GEYJ 222 V (2.2 kΩ)
R670	7030003320	S.RESISTOR	ERJ3GEYJ 101 V (100 Ω)
R672	7030003520	S.RESISTOR	ERJ3GEYJ 472 V (4.7 kΩ)
R673	7030003440	S.RESISTOR	ERJ3GEYJ 102 V (1 kΩ)
R674	7030003320	S.RESISTOR	ERJ3GEYJ 101 V (100 Ω)
R675	7030003480	S.RESISTOR	ERJ3GEYJ 222 V (2.2 kΩ)
R676	7030003440	S.RESISTOR	ERJ3GEYJ 102 V (1 kΩ)
R677	7030003520	S.RESISTOR	ERJ3GEYJ 472 V (4.7 kΩ)
R684	7030007200	S.RESISTOR	ERA3YEB 202V
R685	7030003440	S.RESISTOR	ERJ3GEYJ 102 V (1 kΩ)
R686	7030007210	S.RESISTOR	ERA3YEB 102V
R687	7030007200	S.RESISTOR	ERA3YEB 202V
R688	7030007210	S.RESISTOR	ERA3YEB 102V
R689	7030007200	S.RESISTOR	ERA3YEB 202V
R690	7030007210	S.RESISTOR	ERA3YEB 102V
R691	7030007220	S.RESISTOR	ERA3YED 202V
R692	7030007230	S.RESISTOR	ERA3YED 102V
R693	7030007220	S.RESISTOR	ERA3YED 202V
R694	7030007230	S.RESISTOR	ERA3YED 102V
R695	7030007220	S.RESISTOR	ERA3YED 202V
R696	7030007230	S.RESISTOR	ERA3YED 102V
R697	7030007220	S.RESISTOR	ERA3YED 202V
R698	7030007230	S.RESISTOR	ERA3YED 102V
R699	7030007220	S.RESISTOR	ERA3YED 202V
R700	7030007230	S.RESISTOR	ERA3YED 102V
R701	7030007220	S.RESISTOR	ERA3YED 202V
R702	7030007230	S.RESISTOR	ERA3YED 102V
R703	7030007220	S.RESISTOR	ERA3YED 202V
R704	7030007220	S.RESISTOR	ERA3YED 202V
R705	7030003680	S.RESISTOR	ERJ3GEYJ 104 V (100 kΩ)
R706	7030003690	S.RESISTOR	ERJ3GEYJ 124 V (120 kΩ)
R707	7030003420	S.RESISTOR	ERJ3GEYJ 681 V (680 Ω)
R708	7030003370	S.RESISTOR	ERJ3GEYJ 271 V (270 Ω)
R709	7030003280	S.RESISTOR	ERJ3GEYJ 470 V (47 Ω)
R710	7030003280	S.RESISTOR	ERJ3GEYJ 470 V (47 Ω)
R711	7030003800	S.RESISTOR	ERJ3GEYJ 105 V (1 MΩ)
R712	7030003560	S.RESISTOR	ERJ3GEYJ 103 V (10 kΩ)
R717	7030003560	S.RESISTOR	ERJ3GEYJ 103 V (10 kΩ)
R718	7030003510	S.RESISTOR	ERJ3GEYJ 392 V (3.9 kΩ)
R719	7030003600	S.RESISTOR	ERJ3GEYJ 223 V (22 kΩ)
R721	7030003560	S.RESISTOR	ERJ3GEYJ 103 V (10 kΩ)
R722	7030003560	S.RESISTOR	ERJ3GEYJ 103 V (10 kΩ)
R723	7030003680	S.RESISTOR	ERJ3GEYJ 104 V (100 kΩ)
R724	7030003680	S.RESISTOR	ERJ3GEYJ 104 V (100 kΩ)
R726	7030003280	S.RESISTOR	ERJ3GEYJ 470 V (47 Ω)
R729	7030003640	S.RESISTOR	ERJ3GEYJ 473 V (47 kΩ)
R730	7030003620	S.RESISTOR	ERJ3GEYJ 333 V (33 kΩ)
R731	7030003620	S.RESISTOR	ERJ3GEYJ 333 V (33 kΩ)
R732	7030003620	S.RESISTOR	ERJ3GEYJ 333 V (33 kΩ)
R733	7030003620	S.RESISTOR	ERJ3GEYJ 333 V (33 kΩ)
R734	7030003620	S.RESISTOR	ERJ3GEYJ 333 V (33 kΩ)
R735	7030003620	S.RESISTOR	ERJ3GEYJ 333 V (33 kΩ)
R736	7030003620	S.RESISTOR	ERJ3GEYJ 333 V (33 kΩ)
R737	7030003620	S.RESISTOR	ERJ3GEYJ 333 V (33 kΩ)
R738	7030003680	S.RESISTOR	ERJ3GEYJ 104 V (100 kΩ)
R739	7030003680	S.RESISTOR	ERJ3GEYJ 104 V (100 kΩ)
R741	7030003680	S.RESISTOR	ERJ3GEYJ 104 V (100 kΩ)

[MAIN UNIT]

REF. NO.	ORDER NO.	DESCRIPTION	
R742	7030003680	S.RESISTOR	ERJ3GEYJ 104 V (100 kΩ)
R744	7030003560	S.RESISTOR	ERJ3GEYJ 103 V (10 kΩ)
R745	7030003560	S.RESISTOR	ERJ3GEYJ 103 V (10 kΩ)
R746	7030003480	S.RESISTOR	ERJ3GEYJ 222 V (2.2 kΩ)
R747	7030003480	S.RESISTOR	ERJ3GEYJ 222 V (2.2 kΩ)
R748	7030003560	S.RESISTOR	ERJ3GEYJ 103 V (10 kΩ)
R749	7030003680	S.RESISTOR	ERJ3GEYJ 104 V (100 kΩ)
R750	7030003680	S.RESISTOR	ERJ3GEYJ 104 V (100 kΩ)
R751	7030003560	S.RESISTOR	ERJ3GEYJ 103 V (10 kΩ)
R752	7030003440	S.RESISTOR	ERJ3GEYJ 102 V (1 kΩ)
R753	7030003680	S.RESISTOR	ERJ3GEYJ 104 V (100 kΩ)
R754	7030003680	S.RESISTOR	ERJ3GEYJ 104 V (100 kΩ)
R755	7030003680	S.RESISTOR	ERJ3GEYJ 104 V (100 kΩ)
R756	7030003720	S.RESISTOR	ERJ3GEYJ 224 V (220 kΩ)
R757	7030003500	S.RESISTOR	ERJ3GEYJ 332 V (3.3 kΩ)
R758	7030003680	S.RESISTOR	ERJ3GEYJ 104 V (100 kΩ)
R759	7030003580	S.RESISTOR	ERJ3GEYJ 153 V (15 kΩ)
R760	7030003590	S.RESISTOR	ERJ3GEYJ 183 V (18 kΩ)
R762	7030003560	S.RESISTOR	ERJ3GEYJ 103 V (10 kΩ)
R763	7030003600	S.RESISTOR	ERJ3GEYJ 223 V (22 kΩ)
R765	7030003560	S.RESISTOR	ERJ3GEYJ 103 V (10 kΩ)
R766	7030003600	S.RESISTOR	ERJ3GEYJ 223 V (22 kΩ)
R767	7030003560	S.RESISTOR	ERJ3GEYJ 103 V (10 kΩ)
R768	7030003600	S.RESISTOR	ERJ3GEYJ 223 V (22 kΩ)
R770	7030003560	S.RESISTOR	ERJ3GEYJ 103 V (10 kΩ)
R771	7030003600	S.RESISTOR	ERJ3GEYJ 223 V (22 kΩ)
R772	7030003680	S.RESISTOR	ERJ3GEYJ 104 V (100 kΩ)
R773	7030003520	S.RESISTOR	ERJ3GEYJ 472 V (4.7 kΩ)
R774	7030003640	S.RESISTOR	ERJ3GEYJ 473 V (47 kΩ)
R775	7030003480	S.RESISTOR	ERJ3GEYJ 222 V (2.2 kΩ)
R776	7030003680	S.RESISTOR	ERJ3GEYJ 104 V (100 kΩ)
R777	7030003520	S.RESISTOR	ERJ3GEYJ 472 V (4.7 kΩ)
R778	7030003320	S.RESISTOR	ERJ3GEYJ 101 V (100 Ω)
R779	7030003640	S.RESISTOR	ERJ3GEYJ 473 V (47 kΩ)
R780	7030003530	S.RESISTOR	ERJ3GEYJ 562 V (5.6 kΩ)
R781	7030003340	S.RESISTOR	ERJ3GEYJ 151 V (150 Ω)
R782	7030003560	S.RESISTOR	ERJ3GEYJ 103 V (10 kΩ)
R783	7030003760	S.RESISTOR	ERJ3GEYJ 474 V (470 kΩ)
R784	7030003400	S.RESISTOR	ERJ3GEYJ 471 V (470 Ω)
R791	7030003640	S.RESISTOR	ERJ3GEYJ 473 V (47 kΩ)
R792	7030003740	S.RESISTOR	ERJ3GEYJ 334 V (330 kΩ)
R794	7030003760	S.RESISTOR	ERJ3GEYJ 474 V (470 kΩ)
R795	7030003800	S.RESISTOR	ERJ3GEYJ 105 V (1 MΩ)
R796	7030003610	S.RESISTOR	ERJ3GEYJ 273 V (27 kΩ)
R797	7030003530	S.RESISTOR	ERJ3GEYJ 562 V (5.6 kΩ)
R798	7030003610	S.RESISTOR	ERJ3GEYJ 273 V (27 kΩ)
R799	7030003610	S.RESISTOR	ERJ3GEYJ 273 V (27 kΩ)
R800	7030003320	S.RESISTOR	ERJ3GEYJ 101 V (100 Ω)
R801	7030003530	S.RESISTOR	ERJ3GEYJ 562 V (5.6 kΩ)
R807	7030003630	S.RESISTOR	ERJ3GEYJ 393 V (39 kΩ)
R809	7030003340	S.RESISTOR	ERJ3GEYJ 151 V (150 Ω)
R810	7030003320	S.RESISTOR	ERJ3GEYJ 101 V (100 Ω)
R811	7030003280	S.RESISTOR	ERJ3GEYJ 470 V (47 Ω)
R812	7030003320	S.RESISTOR	ERJ3GEYJ 101 V (100 Ω)
R814	7030003280	S.RESISTOR	ERJ3GEYJ 470 V (47 Ω)
R815	7030003460	S.RESISTOR	ERJ3GEYJ 152 V (1.5 kΩ)
R816	7030003460	S.RESISTOR	ERJ3GEYJ 152 V (1.5 kΩ)
R817	7030003640	S.RESISTOR	ERJ3GEYJ 473 V (47 kΩ)
R818	7030003320	S.RESISTOR	ERJ3GEYJ 101 V (100 Ω)
R819	7030003520	S.RESISTOR	ERJ3GEYJ 472 V (4.7 kΩ)
R820	7030003520	S.RESISTOR	ERJ3GEYJ 472 V (4.7 kΩ)
R821	7030003680	S.RESISTOR	ERJ3GEYJ 104 V (100 kΩ)
R822	7030003680	S.RESISTOR	ERJ3GEYJ 104 V (100 kΩ)
R823	7030003680	S.RESISTOR	ERJ3GEYJ 104 V (100 kΩ)
R824	7030004050	S.RESISTOR	ERJ3GEYJ 1R0 V (1 Ω)
R825	7030003440	S.RESISTOR	ERJ3GEYJ 102 V (1 kΩ)
R826	7030003440	S.RESISTOR	ERJ3GEYJ 102 V (1 kΩ)
R827	7030003440	S.RESISTOR	ERJ3GEYJ 102 V (1 kΩ)
R828	7030003440	S.RESISTOR	ERJ3GEYJ 102 V (1 kΩ)
R829	7030003440	S.RESISTOR	ERJ3GEYJ 102 V (1 kΩ)
R830	7030003440	S.RESISTOR	ERJ3GEYJ 102 V (1 kΩ)
R831	7030003440	S.RESISTOR	ERJ3GEYJ 102 V (1 kΩ)
R832	7030003440	S.RESISTOR	ERJ3GEYJ 102 V (1 kΩ)
R833	7030003440	S.RESISTOR	ERJ3GEYJ 102 V (1 kΩ)
R834	7030003440	S.RESISTOR	ERJ3GEYJ 102 V (1 kΩ)
R835	7030003440	S.RESISTOR	ERJ3GEYJ 102 V (1 kΩ)

S.=Surface mount

Downloaded from www.Manualslib.com manuals search engine

[MAIN UNIT]

REF. NO.	ORDER NO.	DESCRIPTION	
R836	7030003440	S.RESISTOR	ERJ3GEYJ 102 V (1 kΩ)
R837	7030003440	S.RESISTOR	ERJ3GEYJ 102 V (1 kΩ)
R838	7030003440	S.RESISTOR	ERJ3GEYJ 102 V (1 kΩ)
R839	7030003560	S.RESISTOR	ERJ3GEYJ 103 V (10 kΩ)
R840	7030003560	S.RESISTOR	ERJ3GEYJ 103 V (10 kΩ)
R841	7410000950	S.ARRAY	EXB-V8V 102JV
R842	7030003530	S.RESISTOR	ERJ3GEYJ 562 V (5.6 kΩ)
R843	7030003530	S.RESISTOR	ERJ3GEYJ 562 V (5.6 kΩ)
R844	7030003680	S.RESISTOR	ERJ3GEYJ 104 V (100 kΩ)
R851	7030003680	S.RESISTOR	ERJ3GEYJ 104 V (100 kΩ)
R852	7030003680	S.RESISTOR	ERJ3GEYJ 104 V (100 kΩ)
R853	7030003320	S.RESISTOR	ERJ3GEYJ 101 V (100 Ω)
R854	7030003320	S.RESISTOR	ERJ3GEYJ 101 V (100 Ω)
R855	7030003680	S.RESISTOR	ERJ3GEYJ 104 V (100 kΩ)
R856	7510000880	S.THERMISTOR	NTCCF2012 3JH 472KC-T
R857	7030003670	S.RESISTOR	ERJ3GEYJ 823 V (82 kΩ)
R858	7510000900	S.THERMISTOR	NTCCF2012 3SH 223KC-T
R859	7030003600	S.RESISTOR	ERJ3GEYJ 223 V (22 kΩ)
C1	4030006880	S.CERAMIC	C1608 JB 1H 472K-T-A
C2	4030006880	S.CERAMIC	C1608 JB 1H 472K-T-A
C3	4030006880	S.CERAMIC	C1608 JB 1H 472K-T-A
C4	4030006880	S.CERAMIC	C1608 JB 1H 472K-T-A
C5	4030006880	S.CERAMIC	C1608 JB 1H 472K-T-A
C6	4510005870	S.ELECTROLITIC	ECEV1HA3R3SR
C7	4030006880	S.CERAMIC	C1608 JB 1H 472K-T-A
C8	4030006880	S.CERAMIC	C1608 JB 1H 472K-T-A
C9	4030009000	S.CERAMIC	C2012 JB 1C 224K-T-A
C10	4030006880	S.CERAMIC	C1608 JB 1H 472K-T-A
C11	4030007050	S.CERAMIC	C1608 CH 1H 220J-T-A
C12	4030006880	S.CERAMIC	C1608 JB 1H 472K-T-A
C13	4030006880	S.CERAMIC	C1608 JB 1H 472K-T-A
C14	4030006880	S.CERAMIC	C1608 JB 1H 472K-T-A
C15	4030006880	S.CERAMIC	C1608 JB 1H 472K-T-A
C16	4030006880	S.CERAMIC	C1608 JB 1H 472K-T-A
C17	4030006880	S.CERAMIC	C1608 JB 1H 472K-T-A
C18	4030006880	S.CERAMIC	C1608 JB 1H 472K-T-A
C19	4510005860	S.ELECTROLITIC	ECEV1HA2R2SR
C20	4030007140	S.CERAMIC	C1608 CH 1H 121J-T-A
C21	4030008650	S.CERAMIC	C1608 JB 1H 332K-T-A
C22	4030009490	S.CERAMIC	C1608 JB 1H 821K-T-A
C23	4510004630	S.ELECTROLITIC	ECEV1CA100SR
C24	4510004630	S.ELECTROLITIC	ECEV1CA100SR
C25	4510004630	S.ELECTROLITIC	ECEV1CA100SR
C26	4030006870	S.CERAMIC	C1608 JB 1H 222K-T-A
C27	4030009110	S.CERAMIC	C3216 JB 1C 474K-T-A
C28	4510004650	S.ELECTROLITIC	ECEV1EA4R7SR
C29	4510004630	S.ELECTROLITIC	ECEV1CA100SR
C30	4510004650	S.ELECTROLITIC	ECEV1EA4R7SR
C31	4030011600	S.CERAMIC	C1608 JB 1C 104KT-N
C32	4510005370	S.ELECTROLITIC	ECEV1AA221P
C33	4030009110	S.CERAMIC	C3216 JB 1C 474K-T-A
C35	4030006880	S.CERAMIC	C1608 JB 1H 472K-T-A
C38	4030006880	S.CERAMIC	C1608 JB 1H 472K-T-A
C39	4510004630	S.ELECTROLITIC	ECEV1CA100SR
C40	4030010210	S.CERAMIC	C3216 JB 1C 105M-T-A
C41	4510004630	S.ELECTROLITIC	ECEV1CA100SR
C42	4510004630	S.ELECTROLITIC	ECEV1CA100SR
C43	4510004630	S.ELECTROLITIC	ECEV1CA100SR
C44	4030009110	S.CERAMIC	C3216 JB 1C 474K-T-A
C45	4030006860	S.CERAMIC	C1608 JB 1H 102K-T-A
C47	4030011600	S.CERAMIC	C1608 JB 1C 104KT-N
C48	4030006880	S.CERAMIC	C1608 JB 1H 472K-T-A
C49	4030006860	S.CERAMIC	C1608 JB 1H 102K-T-A
C50	4030006860	S.CERAMIC	C1608 JB 1H 102K-T-A
C51	4030006880	S.CERAMIC	C1608 JB 1H 472K-T-A
C52	4030006880	S.CERAMIC	C1608 JB 1H 472K-T-A
C53	4030006880	S.CERAMIC	C1608 JB 1H 472K-T-A
C54	4030006880	S.CERAMIC	C1608 JB 1H 472K-T-A
C55	4030006880	S.CERAMIC	C1608 JB 1H 472K-T-A
C56	4030006860	S.CERAMIC	C1608 JB 1H 102K-T-A
C57	4510005870	S.ELECTROLITIC	ECEV1HA3R3SR
C58	4030006860	S.CERAMIC	C1608 JB 1H 102K-T-A
C59	4030006930	S.CERAMIC	C1608 CH 1H 020C-T-A
C61	4030006900	S.CERAMIC	C1608 JB 1E 103K-T-A

[MAIN UNIT]

REF. NO.	ORDER NO.	DESCRIPTION	
C62	4030006880	S.CERAMIC	C1608 JB 1H 472K-T-A
C63	4550006560	S.TANTALUM	ECST1CY225R
C64	4030006880	S.CERAMIC	C1608 JB 1H 472K-T-A
C65	4030006900	S.CERAMIC	C1608 JB 1E 103K-T-A
C66	4510004630	S.ELECTROLITIC	ECEV1CA100SR
C67	4030006880	S.CERAMIC	C1608 JB 1H 472K-T-A
C68	4030006860	S.CERAMIC	C1608 JB 1H 102K-T-A
C69	4030006880	S.CERAMIC	C1608 JB 1H 472K-T-A
C70	4030006900	S.CERAMIC	C1608 JB 1E 103K-T-A
C71	4030007140	S.CERAMIC	C1608 CH 1H 121J-T-A
C72	4030006850	S.CERAMIC	C1608 JB 1H 471K-T-A
C74	4510004650	S.ELECTROLITIC	ECEV1EA4R7SR
C75	4030006880	S.CERAMIC	C1608 JB 1H 472K-T-A
C76	4030006880	S.CERAMIC	C1608 JB 1H 472K-T-A
C77	4030006880	S.CERAMIC	C1608 JB 1H 472K-T-A
C78	4510004630	S.ELECTROLITIC	ECEV1CA100SR
C79	4030006880	S.CERAMIC	C1608 JB 1H 472K-T-A
C80	4030006950	S.CERAMIC	C1608 CH 1H 040C-T-A
C81	4030006880	S.CERAMIC	C1608 JB 1H 472K-T-A
C82	4030006880	S.CERAMIC	C1608 JB 1H 472K-T-A
C83	4030011600	S.CERAMIC	C1608 JB 1C 104KT-N
C84	4030008920	S.CERAMIC	C1608 JB 1C 473K-T-A
C85	4030007130	S.CERAMIC	C1608 CH 1H 101J-T-A
C86	4030006880	S.CERAMIC	C1608 JB 1H 472K-T-A
C87	4030006880	S.CERAMIC	C1608 JB 1H 472K-T-A
C88	4510005860	S.ELECTROLITIC	ECEV1HA2R2SR
C89	4030006880	S.CERAMIC	C1608 JB 1H 472K-T-A
C90	4030006880	S.CERAMIC	C1608 JB 1H 472K-T-A
C91	4030011600	S.CERAMIC	C1608 JB 1C 104KT-N
C92	4030010760	S.CERAMIC	C1608 CH 1H 331J-T-A
C93	4030007130	S.CERAMIC	C1608 CH 1H 101J-T-A
C94	4030007160	S.CERAMIC	C1608 CH 1H 181J-T-A
C95	4030008290	S.CERAMIC	C1608 UJ 1H 270J-T-A
C96	4030010220	S.CERAMIC	C2012 CH 1H 102J-T-A
C97	4030008920	S.CERAMIC	C1608 JB 1C 473K-T-A
C98	4030006880	S.CERAMIC	C1608 JB 1H 472K-T-A
C99	4030007130	S.CERAMIC	C1608 CH 1H 101J-T-A
C100	4510004630	S.ELECTROLITIC	ECEV1CA100SR
C101	4030011600	S.CERAMIC	C1608 JB 1C 104KT-N
C102	4030008920	S.CERAMIC	C1608 JB 1C 473K-T-A
C103	4030006880	S.CERAMIC	C1608 JB 1H 472K-T-A
C104	4030007060	S.CERAMIC	C1608 CH 1H 270J-T-A
C105	4030006880	S.CERAMIC	C1608 JB 1H 472K-T-A
C106	4030006880	S.CERAMIC	C1608 JB 1H 472K-T-A
C107	4030006880	S.CERAMIC	C1608 JB 1H 472K-T-A
C113	4030006880	S.CERAMIC	C1608 JB 1H 472K-T-A
C116	4030010210	S.CERAMIC	C3216 JB 1C 105M-T-A
C117	4030006880	S.CERAMIC	C1608 JB 1H 472K-T-A
C118	4030010210	S.CERAMIC	C3216 JB 1C 105M-T-A
C120	4030008630	S.CERAMIC	C1608 JF 1C 104Z-T-A
C121	4030006880	S.CERAMIC	C1608 JB 1H 472K-T-A
C122	4030006880	S.CERAMIC	C1608 JB 1H 472K-T-A
C123	4030006900	S.CERAMIC	C1608 JB 1E 103K-T-A
C126	4030006900	S.CERAMIC	C1608 JB 1E 103K-T-A
C141	4030006900	S.CERAMIC	C1608 JB 1E 103K-T-A
C142	4510004630	S.ELECTROLITIC	ECEV1CA100SR
C143	4030008630	S.CERAMIC	C1608 JF 1C 104Z-T-A
C144	4030007130	S.CERAMIC	C1608 CH 1H 101J-T-A
C145	4030011600	S.CERAMIC	C1608 JB 1C 104KT-N
C150	4030007010	S.CERAMIC	C1608 CH 1H 100D-T-A
C151	4030007140	S.CERAMIC	C1608 CH 1H 121J-T-A
C152	4030007140	S.CERAMIC	C1608 CH 1H 121J-T-A
C153	4030006900	S.CERAMIC	C1608 JB 1E 103K-T-A
C155	4030008320	S.CERAMIC	C1608 UJ 1H 470J-T-A
C156	4030006880	S.CERAMIC	C1608 JB 1H 472K-T-A
C157	4030006880	S.CERAMIC	C1608 JB 1H 472K-T-A
C158	4030006880	S.CERAMIC	C1608 JB 1H 472K-T-A
C163	4030011600	S.CERAMIC	C1608 JB 1C 104KT-N
C164	4030008900	S.CERAMIC	C1608 JB 1C 333K-T-A
C165	4030008900	S.CERAMIC	C1608 JB 1C 333K-T-A
C166	4030011600	S.CERAMIC	C1608 JB 1C 104KT-N
C167	4030006900	S.CERAMIC	C1608 JB 1E 103K-T-A
C168	4030006900	S.CERAMIC	C1608 JB 1E 103K-T-A
C169	4030006900	S.CERAMIC	C1608 JB 1E 103K-T-A
C170	4510004630	S.ELECTROLITIC	ECEV1CA100SR
C171	4030011600	S.CERAMIC	C1608 JB 1C 104KT-N

S.=Surface mount

Downloaded from www.Manualslib.com manuals search engine

[MAIN UNIT]

REF. NO.	ORDER NO.	DESCRIPTION	
C174	4030006880	S.CERAMIC	C1608 JB 1H 472K-T-A
C175	4030010210	S.CERAMIC	C3216 JB 1C 105M-T-A
C176	4030006880	S.CERAMIC	C1608 JB 1H 472K-T-A
C177	4030006880	S.CERAMIC	C1608 JB 1H 472K-T-A
C179	4030006880	S.CERAMIC	C1608 JB 1H 472K-T-A
C180	4340000050	S.MYLAR	ECH-U 1C472JB5
C181	4030006880	S.CERAMIC	C1608 JB 1H 472K-T-A
C182	4030006880	S.CERAMIC	C1608 JB 1H 472K-T-A
C184	4030006880	S.CERAMIC	C1608 JB 1H 472K-T-A
C185	4030006880	S.CERAMIC	C1608 JB 1H 472K-T-A
C188	4340000050	S.MYLAR	ECH-U 1C472JB5
C189	4030006880	S.CERAMIC	C1608 JB 1H 472K-T-A
C191	4030006880	S.CERAMIC	C1608 JB 1H 472K-T-A
C192	4030006880	S.CERAMIC	C1608 JB 1H 472K-T-A
C193	4030006880	S.CERAMIC	C1608 JB 1H 472K-T-A
C194	4030007050	S.CERAMIC	C1608 CH 1H 220J-T-A
C196	4030006880	S.CERAMIC	C1608 JB 1H 472K-T-A
C197	4030006980	S.CERAMIC	C1608 CH 1H 070D-T-A
C198	4030006880	S.CERAMIC	C1608 JB 1H 472K-T-A
C200	4030006880	S.CERAMIC	C1608 JB 1H 472K-T-A
C201	4030006870	S.CERAMIC	C1608 JB 1H 222K-T-A
C202	4030011600	S.CERAMIC	C1608 JB 1C 104KT-N
C203	4030008630	S.CERAMIC	C1608 JF 1C 104Z-T-A
C205	4030006860	S.CERAMIC	C1608 JB 1H 102K-T-A
C206	4030009000	S.CERAMIC	C2012 JB 1C 224K-T-A
C207	4030006880	S.CERAMIC	C1608 JB 1H 472K-T-A
C208	4510004540	S.ELECTROLITIC	ECEV0JA470SR
C209	4030007140	S.CERAMIC	C1608 CH 1H 121J-T-A
C210	4510004630	S.ELECTROLITIC	ECEV1CA100SR
C211	4030010210	S.CERAMIC	C3216 JB 1C 105M-T-A
C212	4030009000	S.CERAMIC	C2012 JB 1C 224K-T-A
C213	4030006880	S.CERAMIC	C1608 JB 1H 472K-T-A
C214	4510005310	S.ELECTROLITIC	ECEV1CA220SR
C215	4510004630	S.ELECTROLITIC	ECEV1CA100SR
C216	4510004630	S.ELECTROLITIC	ECEV1CA100SR
C217	4030009110	S.CERAMIC	C3216 JB 1C 474K-T-A
C218	4030006860	S.CERAMIC	C1608 JB 1H 102K-T-A
C219	4030006880	S.CERAMIC	C1608 JB 1H 472K-T-A
C220	4030006880	S.CERAMIC	C1608 JB 1H 472K-T-A
C221	4030006880	S.CERAMIC	C1608 JB 1H 472K-T-A
C222	4030006880	S.CERAMIC	C1608 JB 1H 472K-T-A
C223	4030008630	S.CERAMIC	C1608 JF 1C 104Z-T-A
C224	4030006860	S.CERAMIC	C1608 JB 1H 102K-T-A
C240	4030006860	S.CERAMIC	C1608 JB 1H 102K-T-A
C241	4510004640	S.ELECTROLITIC	ECEV1CA470SP
C242	4030006860	S.CERAMIC	C1608 JB 1H 102K-T-A
C243	4030006860	S.CERAMIC	C1608 JB 1H 102K-T-A
C248	4030006900	S.CERAMIC	C1608 JB 1E 103K-T-A
C249	4510004630	S.ELECTROLITIC	ECEV1CA100SR
C250	4030006900	S.CERAMIC	C1608 JB 1E 103K-T-A
C251	4030006900	S.CERAMIC	C1608 JB 1E 103K-T-A
C252	4030006900	S.CERAMIC	C1608 JB 1E 103K-T-A
C253	4030011600	S.CERAMIC	C1608 JB 1C 104KT-N
C254	4030011600	S.CERAMIC	C1608 JB 1C 104KT-N
C255	4550006440	S.TANTALUM	ECST1AX106R
C256	4030011600	S.CERAMIC	C1608 JB 1C 104KT-N
C257	4030011600	S.CERAMIC	C1608 JB 1C 104KT-N
C258	4030006900	S.CERAMIC	C1608 JB 1E 103K-T-A
C259	4030008630	S.CERAMIC	C1608 JF 1C 104Z-T-A
C260	4510004630	S.ELECTROLITIC	ECEV1CA100SR
C261	4030011600	S.CERAMIC	C1608 JB 1C 104KT-N
C262	4030007130	S.CERAMIC	C1608 CH 1H 101J-T-A
C263	4030011600	S.CERAMIC	C1608 JB 1C 104KT-N
C267	4030007140	S.CERAMIC	C1608 CH 1H 121J-T-A
C268	4030007140	S.CERAMIC	C1608 CH 1H 121J-T-A
C269	4030006900	S.CERAMIC	C1608 JB 1E 103K-T-A
C271	4030008320	S.CERAMIC	C1608 UJ 1H 470J-T-A
C273	4030007010	S.CERAMIC	C1608 CH 1H 100D-T-A
C275	4030006880	S.CERAMIC	C1608 JB 1H 472K-T-A
C276	4030006880	S.CERAMIC	C1608 JB 1H 472K-T-A
C277	4030008900	S.CERAMIC	C1608 JB 1C 333K-T-A
C278	4030008900	S.CERAMIC	C1608 JB 1C 333K-T-A
C286	4030007130	S.CERAMIC	C1608 CH 1H 101J-T-A
C287	4030006880	S.CERAMIC	C1608 JB 1H 472K-T-A
C288	4030006880	S.CERAMIC	C1608 JB 1H 472K-T-A
C298	4340000010	S.MYLAR	ECWU 1C 223JB5

[MAIN UNIT]

REF. NO.	ORDER NO.	DESCRIPTION	
C299	4340000010	S.MYLAR	ECWU 1C 223JB5
C300	4340000010	S.MYLAR	ECWU 1C 223JB5
C301	4510004640	S.ELECTROLITIC	ECEV1CA470SP
C302	4550006440	S.TANTALUM	ECST1AX106R
C303	4030006900	S.CERAMIC	C1608 JB 1E 103K-T-A
C304	4030008900	S.CERAMIC	C1608 JB 1C 333K-T-A
C305	4030006900	S.CERAMIC	C1608 JB 1E 103K-T-A
C306	4510004630	S.ELECTROLITIC	ECEV1CA100SR
C307	4030010210	S.CERAMIC	C3216 JB 1C 105M-T-A
C308	4030010210	S.CERAMIC	C3216 JB 1C 105M-T-A
C309	4030006880	S.CERAMIC	C1608 JB 1H 472K-T-A
C320	4030006880	S.CERAMIC	C1608 JB 1H 472K-T-A
C321	4340000050	S.MYLAR	ECH-U 1C472JB5
C322	4030006880	S.CERAMIC	C1608 JB 1H 472K-T-A
C323	4030006900	S.CERAMIC	C1608 JB 1E 103K-T-A
C324	4030006880	S.CERAMIC	C1608 JB 1H 472K-T-A
C325	4030006880	S.CERAMIC	C1608 JB 1H 472K-T-A
C326	4030006880	S.CERAMIC	C1608 JB 1H 472K-T-A
C328	4030006880	S.CERAMIC	C1608 JB 1H 472K-T-A
C329	4340000050	S.MYLAR	ECH-U 1C472JB5
C330	4030006880	S.CERAMIC	C1608 JB 1H 472K-T-A
C332	4030006880	S.CERAMIC	C1608 JB 1H 472K-T-A
C333	4030006880	S.CERAMIC	C1608 JB 1H 472K-T-A
C334	4030006880	S.CERAMIC	C1608 JB 1H 472K-T-A
C335	4030007050	S.CERAMIC	C1608 CH 1H 220J-T-A
C336	4030006880	S.CERAMIC	C1608 JB 1H 472K-T-A
C338	4030006980	S.CERAMIC	C1608 CH 1H 070D-T-A
C340	4030006880	S.CERAMIC	C1608 JB 1H 472K-T-A
C341	4030008630	S.CERAMIC	C1608 JF 1C 104Z-T-A
C342	4030006870	S.CERAMIC	C1608 JB 1H 222K-T-A
C343	4030011600	S.CERAMIC	C1608 JB 1C 104KT-N
C344	4030006880	S.CERAMIC	C1608 JB 1H 472K-T-A
C345	4030008630	S.CERAMIC	C1608 JF 1C 104Z-T-A
C346	4510004630	S.ELECTROLITIC	ECEV1CA100SR
C347	4510006220	S.ELECTROLITIC	ECEV1CA101UP
C349	4030008630	S.CERAMIC	C1608 JF 1C 104Z-T-A
C350	4030010210	S.CERAMIC	C3216 JB 1C 105M-T-A
C351	4510006220	S.ELECTROLITIC	ECEV1CA101UP
C352	4030008630	S.CERAMIC	C1608 JF 1C 104Z-T-A
C353	4510004640	S.ELECTROLITIC	ECEV1CA470SP
C354	4030010210	S.CERAMIC	C3216 JB 1C 105M-T-A
C355	4030006900	S.CERAMIC	C1608 JB 1E 103K-T-A
C356	4550006460	S.TANTALUM	ECST1VX225R
C357	4550006440	S.TANTALUM	ECST1AX106R
C358	4510004630	S.ELECTROLITIC	ECEV1CA100SR
C359	4030006860	S.CERAMIC	C1608 JB 1H 102K-T-A
C360	4030006900	S.CERAMIC	C1608 JB 1E 103K-T-A
C361	4030006860	S.CERAMIC	C1608 JB 1H 102K-T-A
C362	4030006860	S.CERAMIC	C1608 JB 1H 102K-T-A
C369	4030006880	S.CERAMIC	C1608 JB 1H 472K-T-A
C371	4030006960	S.CERAMIC	C1608 CH 1H 050C-T-A
C373	4030006880	S.CERAMIC	C1608 JB 1H 472K-T-A
C374	4030006880	S.CERAMIC	C1608 JB 1H 472K-T-A
C375	4030011600	S.CERAMIC	C1608 JB 1C 104KT-N
C376	4030006880	S.CERAMIC	C1608 JB 1H 472K-T-A
C378	4030006880	S.CERAMIC	C1608 JB 1H 472K-T-A
C380	4030006860	S.CERAMIC	C1608 JB 1H 102K-T-A
C381	4030009000	S.CERAMIC	C2012 JB 1C 224K-T-A
C382	4510004540	S.ELECTROLITIC	ECEV0JA470SR
C383	4030006880	S.CERAMIC	C1608 JB 1H 472K-T-A
C384	4030007140	S.CERAMIC	C1608 CH 1H 121J-T-A
C385	4510004630	S.ELECTROLITIC	ECEV1CA100SR
C386	4030006880	S.CERAMIC	C1608 JB 1H 472K-T-A
C387	4030009000	S.CERAMIC	C2012 JB 1C 224K-T-A
C388	4030006900	S.CERAMIC	C1608 JB 1E 103K-T-A
C389	4510004630	S.ELECTROLITIC	ECEV1CA100SR
C397	4030011600	S.CERAMIC	C1608 JB 1C 104KT-N
C398	4030011600	S.CERAMIC	C1608 JB 1C 104KT-N
C399	4510004630	S.ELECTROLITIC	ECEV1CA100SR
C400	4510005370	S.ELECTROLITIC	ECEV1AA221P
C401	4030009110	S.CERAMIC	C3216 JB 1C 474K-T-A
C402	4510004630	S.ELECTROLITIC	ECEV1CA100SR
C403	4030006860	S.CERAMIC	C1608 JB 1H 102K-T-A
C404	4510004650	S.ELECTROLITIC	ECEV1EA4R7SR
C405	4030006880	S.CERAMIC	C1608 JB 1H 472K-T-A
C406	4510004630	S.ELECTROLITIC	ECEV1CA100SR

S.=Surface mount

Downloaded from www.Manualslib.com manuals search engine

[MAIN UNIT]

REF. NO.	ORDER NO.	DESCRIPTION	
C407	4030011600	S.CERAMIC	C1608 JB 1C 104KT-N
C409	4030011600	S.CERAMIC	C1608 JB 1C 104KT-N
C410	4030011600	S.CERAMIC	C1608 JB 1C 104KT-N
C411	4030011600	S.CERAMIC	C1608 JB 1C 104KT-N
C412	4510004630	S.ELECTROLITIC	ECEV1CA100SR
C413	4030006860	S.CERAMIC	C1608 JB 1H 102K-T-A
C414	4510004650	S.ELECTROLITIC	ECEV1EA4R7SR
C415	4510004650	S.ELECTROLITIC	ECEV1EA4R7SR
C416	4030006880	S.CERAMIC	C1608 JB 1H 472K-T-A
C417	4510005370	S.ELECTROLITIC	ECEV1AA221P
C418	4030009110	S.CERAMIC	C3216 JB 1C 474K-T-A
C420	4510004630	S.ELECTROLITIC	ECEV1CA100SR
C421	4030011600	S.CERAMIC	C1608 JB 1C 104KT-N
C422	4510004600	ELECTROLITIC	16 MV 1000 HC
C423	4030006880	S.CERAMIC	C1608 JB 1H 472K-T-A
C424	4510004540	S.ELECTROLITIC	ECEV0JA470SR
C425	4510006220	S.ELECTROLITIC	ECEV1CA101UP
C426	4510004540	S.ELECTROLITIC	ECEV0JA470SR
C427	4510006220	S.ELECTROLITIC	ECEV1CA101UP
C428	4510004590	ELECTROLITIC	16 MV 470 HC
C429	4510006220	S.ELECTROLITIC	ECEV1CA101UP
C430	4510004590	ELECTROLITIC	16 MV 470 HC
C431	4030011600	S.CERAMIC	C1608 JB 1C 104KT-N
C432	4030011600	S.CERAMIC	C1608 JB 1C 104KT-N
C433	4030006860	S.CERAMIC	C1608 JB 1H 102K-T-A
C434	4030006860	S.CERAMIC	C1608 JB 1H 102K-T-A
C435	4030006860	S.CERAMIC	C1608 JB 1H 102K-T-A
C436	4030006860	S.CERAMIC	C1608 JB 1H 102K-T-A
C437	4030006860	S.CERAMIC	C1608 JB 1H 102K-T-A
C438	4030006860	S.CERAMIC	C1608 JB 1H 102K-T-A
C439	4030006860	S.CERAMIC	C1608 JB 1H 102K-T-A
C440	4030006860	S.CERAMIC	C1608 JB 1H 102K-T-A
C441	4030006860	S.CERAMIC	C1608 JB 1H 102K-T-A
C442	4030006860	S.CERAMIC	C1608 JB 1H 102K-T-A
C443	4030006880	S.CERAMIC	C1608 JB 1H 472K-T-A
C444	4030008630	S.CERAMIC	C1608 JF 1C 104Z-T-A
C445	4510005320	S.ELECTROLITIC	ECEV0JA101SP
C446	4510004640	S.ELECTROLITIC	ECEV1CA470SP
C447	4030006900	S.CERAMIC	C1608 JB 1E 103K-T-A
C451	4510005890	S.ELECTROLITIC	ECEV1AAN100R
C452	4030009090	S.CERAMIC	C3216 JB 1C 334K-T-A
C454	4030007080	S.CERAMIC	C1608 CH 1H 390J-T-A
C456	4030011600	S.CERAMIC	C1608 JB 1C 104KT-N
C457	4030006860	S.CERAMIC	C1608 JB 1H 102K-T-A
C458	4030006860	S.CERAMIC	C1608 JB 1H 102K-T-A
C459	4030006870	S.CERAMIC	C1608 JB 1H 222K-T-A
C460	4030006870	S.CERAMIC	C1608 JB 1H 222K-T-A
C461	4030006900	S.CERAMIC	C1608 JB 1E 103K-T-A
C464	4030007030	S.CERAMIC	C1608 CH 1H 150J-T-A
C465	4030006850	S.CERAMIC	C1608 JB 1H 471K-T-A
C466	4030006850	S.CERAMIC	C1608 JB 1H 471K-T-A
C501	4030007090	S.CERAMIC	C1608 CH 1H 470J-T-A
C502	4030006900	S.CERAMIC	C1608 JB 1E 103K-T-A
C503	4030009120	S.CERAMIC	C3216 JB 1C 564K-T-A
C504	4030011600	S.CERAMIC	C1608 JB 1C 104KT-N
C506	4030007090	S.CERAMIC	C1608 CH 1H 470J-T-A
C507	4030009120	S.CERAMIC	C3216 JB 1C 564K-T-A
C508	4030006900	S.CERAMIC	C1608 JB 1E 103K-T-A
C509	4030011600	S.CERAMIC	C1608 JB 1C 104KT-N
C510	4030007050	S.CERAMIC	C1608 CH 1H 220J-T-A
C511	4030006880	S.CERAMIC	C1608 JB 1H 472K-T-A
C512	4030006880	S.CERAMIC	C1608 JB 1H 472K-T-A
C513	4030006880	S.CERAMIC	C1608 JB 1H 472K-T-A
C514	4030006880	S.CERAMIC	C1608 JB 1H 472K-T-A
C515	4030007030	S.CERAMIC	C1608 CH 1H 150J-T-A
C516	4030006880	S.CERAMIC	C1608 JB 1H 472K-T-A
C517	4030006880	S.CERAMIC	C1608 JB 1H 472K-T-A
C518	4030006880	S.CERAMIC	C1608 JB 1H 472K-T-A
C519	4030006880	S.CERAMIC	C1608 JB 1H 472K-T-A
C520	4030006880	S.CERAMIC	C1608 JB 1H 472K-T-A
C522	4030006930	S.CERAMIC	C1608 CH 1H 020C-T-A
C523	4030007080	S.CERAMIC	C1608 CH 1H 390J-T-A
C524	4030006900	S.CERAMIC	C1608 JB 1E 103K-T-A
C525	4030006880	S.CERAMIC	C1608 JB 1H 472K-T-A
C526	4030006880	S.CERAMIC	C1608 JB 1H 472K-T-A
C527	4030006900	S.CERAMIC	C1608 JB 1E 103K-T-A

[MAIN UNIT]

REF. NO.	ORDER NO.	DESCRIPTION	
C528	4510004630	S.ELECTROLITIC	ECEV1CA100SR
C529	4030006880	S.CERAMIC	C1608 JB 1H 472K-T-A
C530	4030006860	S.CERAMIC	C1608 JB 1H 102K-T-A
C531	4030006880	S.CERAMIC	C1608 JB 1H 472K-T-A
C532	4030006900	S.CERAMIC	C1608 JB 1E 103K-T-A
C533	4030007140	S.CERAMIC	C1608 CH 1H 121J-T-A
C534	4030006850	S.CERAMIC	C1608 JB 1H 471K-T-A
C535	4510004650	S.ELECTROLITIC	ECEV1EA4R7SR
C536	4030006880	S.CERAMIC	C1608 JB 1H 472K-T-A
C537	4030010210	S.CERAMIC	C3216 JB 1C 105M-T-A
C539	4510004650	S.ELECTROLITIC	ECEV1EA4R7SR
C541	4030009110	S.CERAMIC	C3216 JB 1C 474K-T-A
C542	4030006880	S.CERAMIC	C1608 JB 1H 472K-T-A
C543	4030006880	S.CERAMIC	C1608 JB 1H 472K-T-A
C544	4030006880	S.CERAMIC	C1608 JB 1H 472K-T-A
C545	4030006880	S.CERAMIC	C1608 JB 1H 472K-T-A
C546	4030006880	S.CERAMIC	C1608 JB 1H 472K-T-A
C547	4030006880	S.CERAMIC	C1608 JB 1H 472K-T-A
C548	4030006880	S.CERAMIC	C1608 JB 1H 472K-T-A
C549	4030006880	S.CERAMIC	C1608 JB 1H 472K-T-A
C550	4030006880	S.CERAMIC	C1608 JB 1H 472K-T-A
C551	4030006880	S.CERAMIC	C1608 JB 1H 472K-T-A
C552	4030006880	S.CERAMIC	C1608 JB 1H 472K-T-A
C553	4030006880	S.CERAMIC	C1608 JB 1H 472K-T-A
C554	4030006880	S.CERAMIC	C1608 JB 1H 472K-T-A
C555	4030006880	S.CERAMIC	C1608 JB 1H 472K-T-A
C556	4030006880	S.CERAMIC	C1608 JB 1H 472K-T-A
C557	4030006880	S.CERAMIC	C1608 JB 1H 472K-T-A
C558	4030008630	S.CERAMIC	C1608 JF 1C 104Z-T-A
C559	4030008630	S.CERAMIC	C1608 JF 1C 104Z-T-A
C562	4030010210	S.CERAMIC	C3216 JB 1C 105M-T-A
C563	4030008630	S.CERAMIC	C1608 JF 1C 104Z-T-A
C564	4030010210	S.CERAMIC	C3216 JB 1C 105M-T-A
C566	4030006860	S.CERAMIC	C1608 JB 1H 102K-T-A
C567	4030006860	S.CERAMIC	C1608 JB 1H 102K-T-A
C568	4030008630	S.CERAMIC	C1608 JF 1C 104Z-T-A
C569	4030008630	S.CERAMIC	C1608 JF 1C 104Z-T-A
C570	4510004650	S.ELECTROLITIC	ECEV1EA4R7SR
C571	4030008630	S.CERAMIC	C1608 JF 1C 104Z-T-A
C572	4030008630	S.CERAMIC	C1608 JF 1C 104Z-T-A
C573	4030006900	S.CERAMIC	C1608 JB 1E 103K-T-A
C574	4510004650	S.ELECTROLITIC	ECEV1EA4R7SR
C575	4030007020	S.CERAMIC	C1608 CH 1H 120J-T-A
C576	4030007130	S.CERAMIC	C1608 CH 1H 101J-T-A
C577	4030007020	S.CERAMIC	C1608 CH 1H 120J-T-A
C578	4030009350	S.CERAMIC	C1608 CH 1H 3R5B-T-A
C579	4030007050	S.CERAMIC	C1608 CH 1H 220J-T-A
C580	4030009540	S.CERAMIC	C1608 CH 1H 1R5B-T-A
C581	4030007020	S.CERAMIC	C1608 CH 1H 120J-T-A
C582	4030007060	S.CERAMIC	C1608 CH 1H 270J-T-A
C584	4030006880	S.CERAMIC	C1608 JB 1H 472K-T-A
C585	4030008630	S.CERAMIC	C1608 JF 1C 104Z-T-A
C586	4030007130	S.CERAMIC	C1608 CH 1H 101J-T-A
C587	4030007170	S.CERAMIC	C1608 CH 1H 221J-T-A
C588	4030007100	S.CERAMIC	C1608 CH 1H 560J-T-A
C589	4030007160	S.CERAMIC	C1608 CH 1H 181J-T-A
C590	4030006880	S.CERAMIC	C1608 JB 1H 472K-T-A
C592	4030009000	S.CERAMIC	C2012 JB 1C 224K-T-A
C593	4030006880	S.CERAMIC	C1608 JB 1H 472K-T-A
C594	4030007090	S.CERAMIC	C1608 CH 1H 470J-T-A
C595	4030007090	S.CERAMIC	C1608 CH 1H 470J-T-A
C596	4030007090	S.CERAMIC	C1608 CH 1H 470J-T-A
C597	4030007090	S.CERAMIC	C1608 CH 1H 470J-T-A
C598	4030007090	S.CERAMIC	C1608 CH 1H 470J-T-A
C599	4030007090	S.CERAMIC	C1608 CH 1H 470J-T-A
C600	4030007090	S.CERAMIC	C1608 CH 1H 470J-T-A
C601	4030007090	S.CERAMIC	C1608 CH 1H 470J-T-A
C602	4030007090	S.CERAMIC	C1608 CH 1H 470J-T-A
C603	4030011600	S.CERAMIC	C1608 JB 1C 104KT-N
C604	4030007090	S.CERAMIC	C1608 CH 1H 470J-T-A
C605	4030007050	S.CERAMIC	C1608 CH 1H 220J-T-A
C606	4030006880	S.CERAMIC	C1608 JB 1H 472K-T-A
C607	4030008630	S.CERAMIC	C1608 JF 1C 104Z-T-A
C608	4030007090	S.CERAMIC	C1608 CH 1H 470J-T-A
C609	4550006700	S.TANTALUM	ECST1AY106R
C610	4030007090	S.CERAMIC	C1608 CH 1H 470J-T-A

S.=Surface mount

Downloaded from www.Manualslib.com manuals search engine

[MAIN UNIT]

REF. NO.	ORDER NO.	DESCRIPTION	
C611	4030007090	S.CERAMIC	C1608 CH 1H 470J-T-A
C612	4030007090	S.CERAMIC	C1608 CH 1H 470J-T-A
C613	4030007090	S.CERAMIC	C1608 CH 1H 470J-T-A
C614	4550006700	S.TANTALUM	ECST1AY106R
C615	4030007090	S.CERAMIC	C1608 CH 1H 470J-T-A
C616	4030011600	S.CERAMIC	C1608 JB 1C 104KT-N
C617	4030011600	S.CERAMIC	C1608 JB 1C 104KT-N
C618	4030007090	S.CERAMIC	C1608 CH 1H 470J-T-A
C619	4030007090	S.CERAMIC	C1608 CH 1H 470J-T-A
C620	4030011600	S.CERAMIC	C1608 JB 1C 104KT-N
C621	4030007090	S.CERAMIC	C1608 CH 1H 470J-T-A
C622	4030007090	S.CERAMIC	C1608 CH 1H 470J-T-A
C623	4030007090	S.CERAMIC	C1608 CH 1H 470J-T-A
C624	4030007090	S.CERAMIC	C1608 CH 1H 470J-T-A
C625	4030007090	S.CERAMIC	C1608 CH 1H 470J-T-A
C626	4030007090	S.CERAMIC	C1608 CH 1H 470J-T-A
C627	4030007090	S.CERAMIC	C1608 CH 1H 470J-T-A
C628	4030007090	S.CERAMIC	C1608 CH 1H 470J-T-A
C629	4030007090	S.CERAMIC	C1608 CH 1H 470J-T-A
C630	4030007090	S.CERAMIC	C1608 CH 1H 470J-T-A
C631	4030011600	S.CERAMIC	C1608 JB 1C 104KT-N
C632	4030007090	S.CERAMIC	C1608 CH 1H 470J-T-A
C633	4030007050	S.CERAMIC	C1608 CH 1H 220J-T-A
C634	4030011600	S.CERAMIC	C1608 JB 1C 104KT-N
C635	4030007090	S.CERAMIC	C1608 CH 1H 470J-T-A
C636	4030011600	S.CERAMIC	C1608 JB 1C 104KT-N
C637	4030007090	S.CERAMIC	C1608 CH 1H 470J-T-A
C638	4030008630	S.CERAMIC	C1608 JF 1C 104Z-T-A
C639	4030006880	S.CERAMIC	C1608 JB 1H 472K-T-A
C640	4030007020	S.CERAMIC	C1608 CH 1H 120J-T-A
C641	4030007130	S.CERAMIC	C1608 CH 1H 101J-T-A
C642	4030007020	S.CERAMIC	C1608 CH 1H 120J-T-A
C643	4030009350	S.CERAMIC	C1608 CH 1H 3R5B-T-A
C644	4030007050	S.CERAMIC	C1608 CH 1H 220J-T-A
C645	4030009540	S.CERAMIC	C1608 CH 1H 1R5B-T-A
C646	4030007020	S.CERAMIC	C1608 CH 1H 120J-T-A
C647	4030008630	S.CERAMIC	C1608 JF 1C 104Z-T-A
C648	4030006900	S.CERAMIC	C1608 JB 1E 103K-T-A
C649	4030006900	S.CERAMIC	C1608 JB 1E 103K-T-A
C650	4030007130	S.CERAMIC	C1608 CH 1H 101J-T-A
C651	4030007170	S.CERAMIC	C1608 CH 1H 221J-T-A
C652	4030007100	S.CERAMIC	C1608 CH 1H 560J-T-A
C653	4030007160	S.CERAMIC	C1608 CH 1H 181J-T-A
C655	4510004650	S.ELECTROLITIC	ECEV1EA4R7SR
C659	4030011600	S.CERAMIC	C1608 JB 1C 104KT-N
C660	4030011600	S.CERAMIC	C1608 JB 1C 104KT-N
C661	4030011600	S.CERAMIC	C1608 JB 1C 104KT-N
C662	4030011600	S.CERAMIC	C1608 JB 1C 104KT-N
C663	4030006850	S.CERAMIC	C1608 JB 1H 471K-T-A
C666	4030006860	S.CERAMIC	C1608 JB 1H 102K-T-A
C667	4030006860	S.CERAMIC	C1608 JB 1H 102K-T-A
C670	4030006850	S.CERAMIC	C1608 JB 1H 471K-T-A
C674	4030011600	S.CERAMIC	C1608 JB 1C 104KT-N
C675	4510004630	S.ELECTROLITIC	ECEV1CA100SR
C676	4030007090	S.CERAMIC	C1608 CH 1H 470J-T-A
C677	4030007090	S.CERAMIC	C1608 CH 1H 470J-T-A
C678	4030007090	S.CERAMIC	C1608 CH 1H 470J-T-A
C679	4030007090	S.CERAMIC	C1608 CH 1H 470J-T-A
C680	4030007090	S.CERAMIC	C1608 CH 1H 470J-T-A
C681	4030007090	S.CERAMIC	C1608 CH 1H 470J-T-A
C682	4030006880	S.CERAMIC	C1608 JB 1H 472K-T-A
C683	4510004630	S.ELECTROLITIC	ECEV1CA100SR
C684	4030006880	S.CERAMIC	C1608 JB 1H 472K-T-A
C686	4030006860	S.CERAMIC	C1608 JB 1H 102K-T-A
C687	4030006860	S.CERAMIC	C1608 JB 1H 102K-T-A
C688	4030010210	S.CERAMIC	C3216 JB 1C 105M-T-A
C689	4030006880	S.CERAMIC	C1608 JB 1H 472K-T-A
C692	4030008630	S.CERAMIC	C1608 JF 1C 104Z-T-A
C693	4030010210	S.CERAMIC	C3216 JB 1C 105M-T-A
C694	4030010210	S.CERAMIC	C3216 JB 1C 105M-T-A
C697	4030011310	S.CERAMIC	C2012 JB 1A 564K-T-A
C698	4030011310	S.CERAMIC	C2012 JB 1A 564K-T-A
C699	4030010210	S.CERAMIC	C3216 JB 1C 105M-T-A
C700	4030006880	S.CERAMIC	C1608 JB 1H 472K-T-A
C701	4030007130	S.CERAMIC	C1608 CH 1H 101J-T-A
C702	4030009990	S.CERAMIC	C1608 CH 1H 200J-T-A

[MAIN UNIT]

REF. NO.	ORDER NO.	DESCRIPTION	
C703	4030009990	S.CERAMIC	C1608 CH 1H 200J-T-A
C704	4030008920	S.CERAMIC	C1608 JB 1C 473K-T-A
C705	4030008920	S.CERAMIC	C1608 JB 1C 473K-T-A
C706	4030010210	S.CERAMIC	C3216 JB 1C 105M-T-A
C707	4030010210	S.CERAMIC	C3216 JB 1C 105M-T-A
C708	4030011600	S.CERAMIC	C1608 JB 1C 104KT-N
C709	4030011600	S.CERAMIC	C1608 JB 1C 104KT-N
C710	4030011600	S.CERAMIC	C1608 JB 1C 104KT-N
C711	4030011600	S.CERAMIC	C1608 JB 1C 104KT-N
C712	4030008870	S.CERAMIC	C1608 JB 1C 183K-T-A
J1	6510007020	CONNECTOR	TMP-J01X-V6
J2	6510007020	CONNECTOR	TMP-J01X-V6
J3	6510016340	S.CONNECTOR	52207-0790
J4	6510007020	CONNECTOR	TMP-J01X-V6
J5	6510007020	CONNECTOR	TMP-J01X-V6
J7	6510007090	CONNECTOR	PI28A-04M
J9	6510007100	CONNECTOR	PI28A-06M
J10	6510010910	CONNECTOR	PI28A-09M
J11	6510016310	CONNECTOR	52030-3010
J12	6450000140	CONNECTOR	HSJ0807-01-010
J13	6450000170	CONNECTOR	TCS4480-01-1111
J15	6510007170	CONNECTOR	PI28A-03M
J16	6450000140	CONNECTOR	HSJ0807-01-010
J17	6450000140	CONNECTOR	HSJ0807-01-010
J18	6510007170	CONNECTOR	PI28A-03M
J19	6450001730	CONNECTOR	HSJ0912-01-040
J20	6510016570	S.CONNECTOR	52465-1291
J22	6510007100	CONNECTOR	PI28A-06M
J23	6910001040	CONNECTOR	IPS-1136
J24	6510007020	CONNECTOR	TMP-J01X-V6
J25	6510019190	S.CONNECTOR	52365-0891
J26	6910001040	CONNECTOR	IPS-1136
J27	6910001040	CONNECTOR	IPS-1136
J28	6910001040	CONNECTOR	IPS-1136
J29	6910001040	CONNECTOR	IPS-1136
J30	6910001040	CONNECTOR	IPS-1136
EP1	0910047533	PCB	B 4813C

[RF-A UNIT]

REF. NO.	ORDER NO.	DESCRIPTION	
IC1	1110003320	S.IC	μPC2710T-E3
IC2	1110003320	S.IC	μPC2710T-E3
Q1	1560000270	S.FET	2SK302-Y (TE85R)
Q2	1560000270	S.FET	2SK302-Y (TE85R)
Q3	1590001600	S.TRANSISTOR	UMD3 TL
Q4	1530000810	TRANSISTOR	2SC2053
Q5	1590000430	S.TRANSISTOR	DTC144EU T107
Q6	1590000430	S.TRANSISTOR	DTC144EU T107
Q7	1580000630	S.FET	3SK228XR-TL
Q8	1590000430	S.TRANSISTOR	DTC144EU T107
Q9	1590001330	S.TRANSISTOR	DTA114EU T107
Q10	1590000430	S.TRANSISTOR	DTC144EU T107
Q11	1560000720	S.FET	2SK2171-4-TD
Q12	1560000720	S.FET	2SK2171-4-TD
Q13	1530000850	TRANSISTOR	2SC2538
D1	1790000450	S.DIODE	MA862(TX)
D2	1720000470	S.VARICAP	1SV239(TPH3)
D3	1790000640	S.VARICAP	MA363B(TX)
D4	1790000640	S.VARICAP	MA363B(TX)
D5	1790000640	S.VARICAP	MA363B(TX)
D6	1750000120	S.DIODE	DWA010-TE
D7	1790000620	S.DIODE	MA77(TW)
D8	1790000450	S.DIODE	MA862(TX)

S.=Surface mount

Downloaded from www.Manualslib.com manuals search engine

[RF-A UNIT]

REF. NO.	ORDER NO.	DESCRIPTION	
D9	1160000060	S.DIODE	DAN202U T107
D10	1790000640	S.VARICAP	MA363B(TX)
D11	1720000270	S.VARICAP	1SV217 (TPH2)
D12	1720000270	S.VARICAP	1SV217 (TPH2)
D13	1790000640	S.VARICAP	MA363B(TX)
D14	1790000490	S.DIODE	HSM88AS-TR
D15	1750000210	S.DIODE	1SV237 (TE85R)
D16	1790000450	S.DIODE	MA862(TX)
D17	1750000120	S.DIODE	DWA010-TE
L1	6150001480	COIL	LS-164
L2	6150001310	COIL	LS-145
L3	6150001310	COIL	LS-145
L4	6150001310	COIL	LS-145
L5	6150001310	COIL	LS-145
L6	6200003450	S.COIL	NL 322522T-082J
L7	6200002990	S.COIL	NL 322522T-2R2J-3
L8	6110001550	COIL	LA-235
L9	6110001680	COIL	LA-254
L10	6110001660	COIL	LA-252
L11	6110001670	COIL	LA-253
L12	6180000810	COIL	LAL 03NA 2R2M
L13	6150001310	COIL	LS-145
L14	6150002880	COIL	LS-302
L15	6150002880	COIL	LS-302
L16	6150001310	COIL	LS-145
L17	6180000810	COIL	LAL 03NA 2R2M
L18	6200001980	S.COIL	NL 252018T-1R0J
L19	6200002590	S.COIL	NL 252018T-039J
L20	6200002590	S.COIL	NL 252018T-039J
L21	6150002200	COIL	LS-228
L22	6200003380	S.COIL	B4F-617PT-1026=P3
L23	6200003330	S.COIL	NL 322522T-1R0J-3
L24	6110001560	COIL	LA-236
L25	6200003370	S.COIL	33CS-655LY-02M=P3
L26	6200001830	S.COIL	NL 322522T-100J
L28	6110001650	COIL	LA-248
R1	7030003440	S.RESISTOR	ERJ3GEYJ 102 V (1 kΩ)
R2	7030003460	S.RESISTOR	ERJ3GEYJ 152 V (1.5 kΩ)
R3	7310002720	S.TRIMMER	RV-148 (RH03A3AS3X0DA)472
R4	7310002670	S.TRIMMER	RV-143 (RH03A3AS2)471
R5	7030003560	S.RESISTOR	ERJ3GEYJ 103 V (10 kΩ)
R6	7030003680	S.RESISTOR	ERJ3GEYJ 104 V (100 kΩ)
R7	7030003680	S.RESISTOR	ERJ3GEYJ 104 V (100 kΩ)
R8	7030003320	S.RESISTOR	ERJ3GEYJ 101 V (100 Ω)
R9	7030003680	S.RESISTOR	ERJ3GEYJ 104 V (100 kΩ)
R10	7030003680	S.RESISTOR	ERJ3GEYJ 104 V (100 kΩ)
R11	7030003680	S.RESISTOR	ERJ3GEYJ 104 V (100 kΩ)
R12	7030003370	S.RESISTOR	ERJ3GEYJ 271 V (270 Ω)
R13	7030003230	S.RESISTOR	ERJ3GEYJ 180 V (18 Ω)
R14	7030003370	S.RESISTOR	ERJ3GEYJ 271 V (270 Ω)
R15	7030003320	S.RESISTOR	ERJ3GEYJ 101 V (100 Ω)
R16	7030003440	S.RESISTOR	ERJ3GEYJ 102 V (1 kΩ)
R17	7030003280	S.RESISTOR	ERJ3GEYJ 470 V (47 Ω)
R18	7030000110	S.RESISTOR	MCR10EZHJ 5.6 Ω (5R6)
R19	7030001070	S.RESISTOR	MCR50JZHJ 33 Ω (330)
R20	7030003440	S.RESISTOR	ERJ3GEYJ 102 V (1 kΩ)
R21	7030003440	S.RESISTOR	ERJ3GEYJ 102 V (1 kΩ)
R22	7030003680	S.RESISTOR	ERJ3GEYJ 104 V (100 kΩ)
R23	7030003680	S.RESISTOR	ERJ3GEYJ 104 V (100 kΩ)
R24	7030003680	S.RESISTOR	ERJ3GEYJ 104 V (100 kΩ)
R25	7030003250	S.RESISTOR	ERJ3GEYJ 270 V (27 Ω)
R26	7030003300	S.RESISTOR	ERJ3GEYJ 680 V (68 Ω)
R27	7030003670	S.RESISTOR	ERJ3GEYJ 823 V (82 kΩ)
R28	7030003680	S.RESISTOR	ERJ3GEYJ 104 V (100 kΩ)
R29	7030003680	S.RESISTOR	ERJ3GEYJ 104 V (100 kΩ)
R30	7030003530	S.RESISTOR	ERJ3GEYJ 562 V (5.6 kΩ)
R31	7030003360	S.RESISTOR	ERJ3GEYJ 221 V (220 Ω)
R32	7010000790	RESISTOR	R25XJ 1 Ω
R33	7030003640	S.RESISTOR	ERJ3GEYJ 473 V (47 kΩ)
R34	7030003440	S.RESISTOR	ERJ3GEYJ 102 V (1 kΩ)
R35	7030003410	S.RESISTOR	ERJ3GEYJ 561 V (560 Ω)

[RF-A UNIT]

REF. NO.	ORDER NO.	DESCRIPTION	
R36	7030003320	S.RESISTOR	ERJ3GEYJ 101 V (100 Ω)
R37	7030003340	S.RESISTOR	ERJ3GEYJ 151 V (150 Ω)
R38	7030003480	S.RESISTOR	ERJ3GEYJ 222 V (2.2 kΩ)
R39	7030003460	S.RESISTOR	ERJ3GEYJ 152 V (1.5 kΩ)
R40	7030003480	S.RESISTOR	ERJ3GEYJ 222 V (2.2 kΩ)
R41	7030003280	S.RESISTOR	ERJ3GEYJ 470 V (47 Ω)
R43	7030003400	S.RESISTOR	ERJ3GEYJ 471 V (470 Ω)
R44	7030003400	S.RESISTOR	ERJ3GEYJ 471 V (470 Ω)
R45	7030003400	S.RESISTOR	ERJ3GEYJ 471 V (470 Ω)
R47	7030000160	S.RESISTOR	MCR10EZHJ 15 Ω (150)
R48	7030000250	S.RESISTOR	MCR10EZHJ 82 Ω (820)
R49	7030000160	S.RESISTOR	MCR10EZHJ 15 Ω (150)
R50	7030001010	S.RESISTOR	MCR50JZHJ 10 Ω (100)
R51	7030003370	S.RESISTOR	ERJ3GEYJ 271 V (270 Ω)
R52	7030003280	S.RESISTOR	ERJ3GEYJ 470 V (47 Ω)
R54	7030000070	S.RESISTOR	MCR10EZHJ 2.7 Ω (2R7)
R55	7030003510	S.RESISTOR	ERJ3GEYJ 392 V (3.9 kΩ)
R56	7030003450	S.RESISTOR	ERJ3GEYJ 122 V (1.2 kΩ)
R57	7030003370	S.RESISTOR	ERJ3GEYJ 271 V (270 Ω)
R58	7030003370	S.RESISTOR	ERJ3GEYJ 271 V (270 Ω)
R59	7030003320	S.RESISTOR	ERJ3GEYJ 101 V (100 Ω)
R60	7030003420	S.RESISTOR	ERJ3GEYJ 681 V (680 Ω)
R61	7510000830	S.THERMISTOR	NTCCF2012 3EH 471KC-T
R62	7030003360	S.RESISTOR	ERJ3GEYJ 221 V (220 Ω)
R63	7030003240	S.RESISTOR	ERJ3GEYJ 220 V (22 Ω)
C1	4030006880	S.CERAMIC	C1608 JB 1H 472K-T-A
C2	4030006880	S.CERAMIC	C1608 JB 1H 472K-T-A
C3	4030007130	S.CERAMIC	C1608 CH 1H 101J-T-A
C4	4030007070	S.CERAMIC	C1608 CH 1H 330J-T-A
C5	4030007070	S.CERAMIC	C1608 CH 1H 330J-T-A
C6	4030006860	S.CERAMIC	C1608 JB 1H 102K-T-A
C7	4030006860	S.CERAMIC	C1608 JB 1H 102K-T-A
C8	4030006940	S.CERAMIC	C1608 CH 1H 030C-T-A
C9	4030006860	S.CERAMIC	C1608 JB 1H 102K-T-A
C10	4030006860	S.CERAMIC	C1608 JB 1H 102K-T-A
C11	4030006860	S.CERAMIC	C1608 JB 1H 102K-T-A
C12	4030006970	S.CERAMIC	C1608 CH 1H 060D-T-A
C13	4030008250	S.CERAMIC	C1608 UJ 1H 120J-T-A
C14	4030009570	S.CERAMIC	C1608 CH 1H 0R3B-T-A
C15	4030009570	S.CERAMIC	C1608 CH 1H 0R3B-T-A
C16	4030008250	S.CERAMIC	C1608 UJ 1H 120J-T-A
C17	4030009570	S.CERAMIC	C1608 CH 1H 0R3B-T-A
C18	4030009570	S.CERAMIC	C1608 CH 1H 0R3B-T-A
C19	4030008250	S.CERAMIC	C1608 UJ 1H 120J-T-A
C20	4030006860	S.CERAMIC	C1608 JB 1H 102K-T-A
C21	4030006860	S.CERAMIC	C1608 JB 1H 102K-T-A
C22	4030006860	S.CERAMIC	C1608 JB 1H 102K-T-A
C23	4030006860	S.CERAMIC	C1608 JB 1H 102K-T-A
C24	4030006960	S.CERAMIC	C1608 CH 1H 050C-T-A
C25	4030006850	S.CERAMIC	C1608 JB 1H 471K-T-A
C26	4030006860	S.CERAMIC	C1608 JB 1H 102K-T-A
C27	4610001890	S.TRIMMER	CTZ3E-20C-W1
C28	4030007010	S.CERAMIC	C1608 CH 1H 100D-T-A
C29	4030006860	S.CERAMIC	C1608 JB 1H 102K-T-A
C30	4030006860	S.CERAMIC	C1608 JB 1H 102K-T-A
C31	4030006860	S.CERAMIC	C1608 JB 1H 102K-T-A
C32	4030006860	S.CERAMIC	C1608 JB 1H 102K-T-A
C33	4030006860	S.CERAMIC	C1608 JB 1H 102K-T-A
C34	4030006860	S.CERAMIC	C1608 JB 1H 102K-T-A
C35	4610001890	S.TRIMMER	CTZ3E-20C-W1
C36	4030007030	S.CERAMIC	C1608 CH 1H 150J-T-A
C37	4610001910	S.TRIMMER	CTZ3E-10A-W1
C38	4030007020	S.CERAMIC	C1608 CH 1H 120J-T-A
C39	4030006880	S.CERAMIC	C1608 JB 1H 472K-T-A
C40	4030006880	S.CERAMIC	C1608 JB 1H 472K-T-A
C41	4030006860	S.CERAMIC	C1608 JB 1H 102K-T-A
C43	4030006860	S.CERAMIC	C1608 JB 1H 102K-T-A
C44	4030006860	S.CERAMIC	C1608 JB 1H 102K-T-A
C47	4030008250	S.CERAMIC	C1608 UJ 1H 120J-T-A
C49	4030009500	S.CERAMIC	C1608 CH 1H 0R5B-T-A
C50	4030007040	S.CERAMIC	C1608 CH 1H 180J-T-A
C51	4030006950	S.CERAMIC	C1608 CH 1H 040C-T-A
C52	4030009560	S.CERAMIC	C1608 CH 1H R75B-T-A
C53	4030006860	S.CERAMIC	C1608 JB 1H 102K-T-A

S.=Surface mount

Downloaded from www.Manualslib.com manuals search engine

[RF-A UNIT]

REF. NO.	ORDER NO.	DESCRIPTION	
C54	4030008270	S.CERAMIC	C1608 UJ 1H 180J-T-A
C55	4030006940	S.CERAMIC	C1608 CH 1H 030C-T-A
C56	4030006860	S.CERAMIC	C1608 JB 1H 102K-T-A
C57	4030006860	S.CERAMIC	C1608 JB 1H 102K-T-A
C58	4030006860	S.CERAMIC	C1608 JB 1H 102K-T-A
C59	4030006860	S.CERAMIC	C1608 JB 1H 102K-T-A
C60	4030008230	S.CERAMIC	C1608 UJ 1H 080D-T-A
C61	4030007120	S.CERAMIC	C1608 CH 1H 820J-T-A
C62	4030006860	S.CERAMIC	C1608 JB 1H 102K-T-A
C63	4030007060	S.CERAMIC	C1608 CH 1H 270J-T-A
C64	4030006860	S.CERAMIC	C1608 JB 1H 102K-T-A
C65	4030006860	S.CERAMIC	C1608 JB 1H 102K-T-A
C66	4030006860	S.CERAMIC	C1608 JB 1H 102K-T-A
C67	4030006860	S.CERAMIC	C1608 JB 1H 102K-T-A
C68	4030006860	S.CERAMIC	C1608 JB 1H 102K-T-A
C69	4030006860	S.CERAMIC	C1608 JB 1H 102K-T-A
C70	4030006860	S.CERAMIC	C1608 JB 1H 102K-T-A
C71	4030006860	S.CERAMIC	C1608 JB 1H 102K-T-A
C72	4030006860	S.CERAMIC	C1608 JB 1H 102K-T-A
C73	4030006860	S.CERAMIC	C1608 JB 1H 102K-T-A
C74	4030006860	S.CERAMIC	C1608 JB 1H 102K-T-A
C75	4030006860	S.CERAMIC	C1608 JB 1H 102K-T-A
C76	4030006860	S.CERAMIC	C1608 JB 1H 102K-T-A
C77	4030006860	S.CERAMIC	C1608 JB 1H 102K-T-A
C78	4030006860	S.CERAMIC	C1608 JB 1H 102K-T-A
C79	4030006860	S.CERAMIC	C1608 JB 1H 102K-T-A
C80	4030007050	S.CERAMIC	C1608 CH 1H 220J-T-A
C81	4030006860	S.CERAMIC	C1608 JB 1H 102K-T-A
C82	4030006860	S.CERAMIC	C1608 JB 1H 102K-T-A
C83	4030009990	S.CERAMIC	C1608 CH 1H 200J-T-A
C84	4030007010	S.CERAMIC	C1608 CH 1H 100D-T-A
C85	4030007020	S.CERAMIC	C1608 CH 1H 120J-T-A
C86	4030006880	S.CERAMIC	C1608 JB 1H 472K-T-A
C87	4030006880	S.CERAMIC	C1608 JB 1H 472K-T-A
C88	4030006860	S.CERAMIC	C1608 JB 1H 102K-T-A
C89	4030006880	S.CERAMIC	C1608 JB 1H 472K-T-A
C90	4030008370	S.CERAMIC	C1608 UJ 1H 121J-T-A
C91	4030006860	S.CERAMIC	C1608 JB 1H 102K-T-A
C92	4030006860	S.CERAMIC	C1608 JB 1H 102K-T-A
C93	4030006860	S.CERAMIC	C1608 JB 1H 102K-T-A
C94	4030006860	S.CERAMIC	C1608 JB 1H 102K-T-A
C95	4030006860	S.CERAMIC	C1608 JB 1H 102K-T-A
C96	4030008960	S.CERAMIC	C2012 JB 1C 104K-T-A
C97	4510004640	S.ELECTROLITIC	ECEV1CA470SP
C98	4030006860	S.CERAMIC	C1608 JB 1H 102K-T-A
C100	4030007080	S.CERAMIC	C1608 CH 1H 390J-T-A
C101	4610001980	S.TRIMMER	CTZ3E-30C-W1
C102	4030009990	S.CERAMIC	C1608 CH 1H 200J-T-A
C103	4610001980	S.TRIMMER	CTZ3E-30C-W1
C104	4030006880	S.CERAMIC	C1608 JB 1H 472K-T-A
C105	4030006860	S.CERAMIC	C1608 JB 1H 102K-T-A
C106	4030006860	S.CERAMIC	C1608 JB 1H 102K-T-A
C107	4030006880	S.CERAMIC	C1608 JB 1H 472K-T-A
C108	4030007020	S.CERAMIC	C1608 CH 1H 120J-T-A
C109	4030007010	S.CERAMIC	C1608 CH 1H 100D-T-A
C110	4030007040	S.CERAMIC	C1608 CH 1H 180J-T-A
C111	4030006860	S.CERAMIC	C1608 JB 1H 102K-T-A
C112	4030007090	S.CERAMIC	C1608 CH 1H 470J-T-A
C113	4030007090	S.CERAMIC	C1608 CH 1H 470J-T-A
C114	4030007090	S.CERAMIC	C1608 CH 1H 470J-T-A
C115	4030007090	S.CERAMIC	C1608 CH 1H 470J-T-A
C116	4030007090	S.CERAMIC	C1608 CH 1H 470J-T-A
C117	4030007090	S.CERAMIC	C1608 CH 1H 470J-T-A
C118	4030007090	S.CERAMIC	C1608 CH 1H 470J-T-A
C119	4030007090	S.CERAMIC	C1608 CH 1H 470J-T-A
C120	4030009500	S.CERAMIC	C1608 CH 1H 0R5B-T-A
C121	4030009500	S.CERAMIC	C1608 CH 1H 0R5B-T-A
C122	4030006920	S.CERAMIC	C1608 CH 1H 010C-T-A
C123	4030009500	S.CERAMIC	C1608 CH 1H 0R5B-T-A
C124	4030006860	S.CERAMIC	C1608 JB 1H 102K-T-A
J3	6510006360	CONNECTOR	TMP-J02X-A1
J4	6510018860	CONNECTOR	52030-0810
J6	6510003250	CONNECTOR	TMP-J01X-A2
J7	6510003250	CONNECTOR	TMP-J01X-A2

[RF-A UNIT]

REF. NO.	ORDER NO.	DESCRIPTION	
EP1	0910040354	PCB	B 4015D

[RF-B UNIT]

REF. NO.	ORDER NO.	DESCRIPTION	
IC1	1110003320	S.IC	µPC2710T-E3
IC2	1110003320	S.IC	µPC2710T-E3
IC3	6910007940	S.IC	CB501M1
IC4	1110003320	S.IC	µPC2710T-E3
Q1	1560000270	S.FET	2SK302-Y (TE85R)
Q2	1560000270	S.FET	2SK302-Y (TE85R)
Q3	1530002360	S.TRANSISTOR	2SC2714-Y (TE85R)
Q4	1530002680	S.TRANSISTOR	2SC3357-T2
Q5	1530000640	TRANSISTOR	2SC2407(A)
Q6	1590001600	S.TRANSISTOR	UMD3 TL
Q8	1590000430	S.TRANSISTOR	DTC144EU T107
Q9	1590000430	S.TRANSISTOR	DTC144EU T107
Q11	1560000490	S.FET	2SK508 K52 T2B
Q14	1530000372	S.TRANSISTOR	2SC3356 R24-T2B
Q15	1530000372	S.TRANSISTOR	2SC3356 R24-T2B
Q16	1580000630	S.FET	3SK228XR-TL
D1	1790000450	S.DIODE	MA862(TX)
D2	1750000120	S.DIODE	DWA010-TE
D4	1790000620	S.DIODE	MA77(TW)
D5	1790000450	S.DIODE	MA862(TX)
D6	1790000450	S.DIODE	MA862(TX)
D7	1160000060	S.DIODE	DAN202U T107
D8	1790000620	S.DIODE	MA77(TW)
D9	1790000450	S.DIODE	MA862(TX)
D10	1790000450	S.DIODE	MA862(TX)
D11	1790000640	S.VARICAP	MA363B(TX)
D12	1790000640	S.VARICAP	MA363B(TX)
D13	1790000640	S.VARICAP	MA363B(TX)
D14	1790000640	S.VARICAP	MA363B(TX)
D16	1750000210	S.DIODE	1SV237 (TE85R)
D17	1790000620	S.DIODE	MA77(TW)
D18	1160000060	S.DIODE	DAN202U T107
FI1	2010001110	FILTER	71M15A1 (FL-131)
FI2	2010001100	FILTER	71M15A (FL-130)
L1	6150001480	COIL	LS-164
L2	6150001310	COIL	LS-145
L3	6150001710	COIL	LS-192
L4	6150001710	COIL	LS-192
L5	6150001310	COIL	LS-145
L6	6200002990	S.COIL	NL 322522T-2R2J-3
L7	6200003330	S.COIL	NL 322522T-1R0J-3
L8	6180000770	COIL	LAL 03NA 1R0M
L9	6180000770	COIL	LAL 03NA 1R0M
L10	6200003450	S.COIL	NL 322522T-082J
L11	6200003370	S.COIL	33CS-655LY-02M=P3
L12	6200003370	S.COIL	33CS-655LY-02M=P3
L13	6200003360	S.COIL	33CS-655LY-04K=P3
L14	6200003370	S.COIL	33CS-655LY-02M=P3
L15	6180000770	COIL	LAL 03NA 1R0M
L16	6180000770	COIL	LAL 03NA 1R0M
L17	6200004000	S.COIL	NL 322522T-022K
L18	6200002100	S.COIL	LQN 1A 17NJ04
L19	6200001030	S.COIL	NL 322522T-012K
L20	6150002550	COIL	LS-284
L21	6150002550	COIL	LS-284
L22	6150004210	COIL	LS-480
L23	6150004180	COIL	LS-477
L24	6150002430	COIL	LS-254
L25	6150002430	COIL	LS-254

S.=Surface mount

Downloaded from www.Manualslib.com manuals search engine

[RF-B UNIT]

REF. NO.	ORDER NO.	DESCRIPTION	
L26	6150002430	COIL	LS-254
L27	6150002430	COIL	LS-254
L28	6200003330	S.COIL	NL 322522T-1R0J-3
L29	6200003380	S.COIL	B4F-617PT-1026=P3
L30	6140002550	S.COIL	B4F-617DB-1010=P3
L31	6200003370	S.COIL	33CS-655LY-02M=P3
L32	6200002330	S.COIL	LQN 1A 15NJ04
L33	6200003370	S.COIL	33CS-655LY-02M=P3
L34	6200003330	S.COIL	NL 322522T-1R0J-3
L35	6110001810	COIL	LA-152
L36	6190000970	COIL	7HW-252MXPR-2983A
L37	6190000980	COIL	7HT-302MXPR-1638D
L38	6200002990	S.COIL	NL 322522T-2R2J-3
L39	6200003330	S.COIL	NL 322522T-1R0J-3
L40	6200004020	S.COIL	NL 322522T-039J
L41	6200004020	S.COIL	NL 322522T-039J
R1	7030003440	S.RESISTOR	ERJ3GEYJ 102 V (1 kΩ)
R2	7030003460	S.RESISTOR	ERJ3GEYJ 152 V (1.5 kΩ)
R3	7310002720	S.TRIMMER	RV-148 (RH03A3AS3X0DA)472
R4	7030003400	S.RESISTOR	ERJ3GEYJ 471 V (470 Ω)
R5	7030003400	S.RESISTOR	ERJ3GEYJ 471 V (470 Ω)
R6	7030003320	S.RESISTOR	ERJ3GEYJ 101 V (100 Ω)
R7	7030003470	S.RESISTOR	ERJ3GEYJ 182 V (1.8 kΩ)
R8	7030003560	S.RESISTOR	ERJ3GEYJ 103 V (10 kΩ)
R9	7030003320	S.RESISTOR	ERJ3GEYJ 101 V (100 Ω)
R10	7030003290	S.RESISTOR	ERJ3GEYJ 560 V (56 Ω)
R11	7030003340	S.RESISTOR	ERJ3GEYJ 151 V (150 Ω)
R12	7030003270	S.RESISTOR	ERJ3GEYJ 390 V (39 Ω)
R13	7030003340	S.RESISTOR	ERJ3GEYJ 151 V (150 Ω)
R14	7030003340	S.RESISTOR	ERJ3GEYJ 151 V (150 Ω)
R15	7030003300	S.RESISTOR	ERJ3GEYJ 680 V (68 Ω)
R16	7030003460	S.RESISTOR	ERJ3GEYJ 152 V (1.5 kΩ)
R17	7030003370	S.RESISTOR	ERJ3GEYJ 271 V (270 Ω)
R18	7030003230	S.RESISTOR	ERJ3GEYJ 180 V (18 Ω)
R19	7030003400	S.RESISTOR	ERJ3GEYJ 471 V (470 Ω)
R20	7030003280	S.RESISTOR	ERJ3GEYJ 470 V (47 Ω)
R21	7030003340	S.RESISTOR	ERJ3GEYJ 151 V (150 Ω)
R22	7030003370	S.RESISTOR	ERJ3GEYJ 271 V (270 Ω)
R23	7030003340	S.RESISTOR	ERJ3GEYJ 151 V (150 Ω)
R24	7030003440	S.RESISTOR	ERJ3GEYJ 102 V (1 kΩ)
R25	7030003530	S.RESISTOR	ERJ3GEYJ 562 V (5.6 kΩ)
R26	7030003200	S.RESISTOR	ERJ3GEYJ 100 V (10 Ω)
R27	7030003280	S.RESISTOR	ERJ3GEYJ 470 V (47 Ω)
R29	7030003380	S.RESISTOR	ERJ3GEYJ 331 V (330 Ω)
R30	7030003320	S.RESISTOR	ERJ3GEYJ 101 V (100 Ω)
R31	7030003500	S.RESISTOR	ERJ3GEYJ 332 V (3.3 kΩ)
R32	7030000060	S.RESISTOR	MCR10EZHJ 2.2 Ω (2R2)
R33	7030001050	S.RESISTOR	MCR50JZHJ 22 Ω (220)
R34	7030003480	S.RESISTOR	ERJ3GEYJ 222 V (2.2 kΩ)
R36	7030003430	S.RESISTOR	ERJ3GEYJ 821 V (820 Ω)
R37	7030004030	S.RESISTOR	ERJ3GEYJ 5R6 V (5.6 Ω)
R38	7030003430	S.RESISTOR	ERJ3GEYJ 821 V (820 Ω)
R41	7030003310	S.RESISTOR	ERJ3GEYJ 820 V (82 Ω)
R42	7030003440	S.RESISTOR	ERJ3GEYJ 102 V (1 kΩ)
R43	7030003440	S.RESISTOR	ERJ3GEYJ 102 V (1 kΩ)
R44	7030003480	S.RESISTOR	ERJ3GEYJ 222 V (2.2 kΩ)
R45	7030003320	S.RESISTOR	ERJ3GEYJ 101 V (100 Ω)
R46	7030003310	S.RESISTOR	ERJ3GEYJ 820 V (82 Ω)
R50	7030003480	S.RESISTOR	ERJ3GEYJ 222 V (2.2 kΩ)
R51	7030003460	S.RESISTOR	ERJ3GEYJ 152 V (1.5 kΩ)
R52	7030003520	S.RESISTOR	ERJ3GEYJ 472 V (4.7 kΩ)
R53	7030003320	S.RESISTOR	ERJ3GEYJ 101 V (100 Ω)
R54	7030003520	S.RESISTOR	ERJ3GEYJ 472 V (4.7 kΩ)
R55	7030003470	S.RESISTOR	ERJ3GEYJ 182 V (1.8 kΩ)
R58	7030003600	S.RESISTOR	ERJ3GEYJ 223 V (22 kΩ)
R61	7030003480	S.RESISTOR	ERJ3GEYJ 222 V (2.2 kΩ)
R62	7030003460	S.RESISTOR	ERJ3GEYJ 152 V (1.5 kΩ)
R63	7030003460	S.RESISTOR	ERJ3GEYJ 152 V (1.5 kΩ)
R64	7030003460	S.RESISTOR	ERJ3GEYJ 152 V (1.5 kΩ)
R65	7030003460	S.RESISTOR	ERJ3GEYJ 152 V (1.5 kΩ)
R66	7030003480	S.RESISTOR	ERJ3GEYJ 222 V (2.2 kΩ)
R68	7030003450	S.RESISTOR	ERJ3GEYJ 122 V (1.2 kΩ)
R69	7030003320	S.RESISTOR	ERJ3GEYJ 101 V (100 Ω)

[RF-B UNIT]

REF. NO.	ORDER NO.	DESCRIPTION	
R71	7030003200	S.RESISTOR	ERJ3GEYJ 100 V (10 Ω)
R72	7030003200	S.RESISTOR	ERJ3GEYJ 100 V (10 Ω)
R73	7030003440	S.RESISTOR	ERJ3GEYJ 102 V (1 kΩ)
R74	7030003380	S.RESISTOR	ERJ3GEYJ 331 V (330 Ω)
R75	7030003380	S.RESISTOR	ERJ3GEYJ 331 V (330 Ω)
R76	7030003580	S.RESISTOR	ERJ3GEYJ 153 V (15 kΩ)
R77	7030003200	S.RESISTOR	ERJ3GEYJ 100 V (10 Ω)
R78	7030003680	S.RESISTOR	ERJ3GEYJ 104 V (100 kΩ)
R79	7030003680	S.RESISTOR	ERJ3GEYJ 104 V (100 kΩ)
R80	7030003680	S.RESISTOR	ERJ3GEYJ 104 V (100 kΩ)
R81	7030003280	S.RESISTOR	ERJ3GEYJ 470 V (47 Ω)
R82	7030003680	S.RESISTOR	ERJ3GEYJ 104 V (100 kΩ)
R83	7030003670	S.RESISTOR	ERJ3GEYJ 823 V (82 kΩ)
R85	7030003680	S.RESISTOR	ERJ3GEYJ 104 V (100 kΩ)
R87	7030003560	S.RESISTOR	ERJ3GEYJ 103 V (10 kΩ)
R88	7030003240	S.RESISTOR	ERJ3GEYJ 220 V (22 Ω)
R89	7030003340	S.RESISTOR	ERJ3GEYJ 151 V (150 Ω)
R91	7030003340	S.RESISTOR	ERJ3GEYJ 151 V (150 Ω)
R92	7030003340	S.RESISTOR	ERJ3GEYJ 151 V (150 Ω)
R93	7030003230	S.RESISTOR	ERJ3GEYJ 180 V (18 Ω)
R96	7030003320	S.RESISTOR	ERJ3GEYJ 101 V (100 Ω)
R97	7030003310	S.RESISTOR	ERJ3GEYJ 820 V (82 Ω)
R98	7030003340	S.RESISTOR	ERJ3GEYJ 151 V (150 Ω)
R99	7030003270	S.RESISTOR	ERJ3GEYJ 390 V (39 Ω)
R100	7030003230	S.RESISTOR	ERJ3GEYJ 180 V (18 Ω)
R101	7030003370	S.RESISTOR	ERJ3GEYJ 271 V (270 Ω)
R102	7030003310	S.RESISTOR	ERJ3GEYJ 820 V (82 Ω)
R103	7030003310	S.RESISTOR	ERJ3GEYJ 820 V (82 Ω)
R104	7310002630	S.TRIMMER	RV-139 (RH03A3A12)101
R105	7030003390	S.RESISTOR	ERJ3GEYJ 391 V (390 Ω)
R107	7030003250	S.RESISTOR	ERJ3GEYJ 270 V (27 Ω)
R109	7510000840	S.THERMISTOR	NTCCF2012 3EH 681KC-T
R110	7510000850	S.THERMISTOR	NTCCF2012 3BH 102KC-T
R111	7030003370	S.RESISTOR	ERJ3GEYJ 271 V (270 Ω)
R113	7030003320	S.RESISTOR	ERJ3GEYJ 101 V (100 Ω)
C1	4030006880	S.CERAMIC	C1608 JB 1H 472K-T-A
C2	4030008360	S.CERAMIC	C1608 UJ 1H 101J-T-A
C3	4030007800	S.CERAMIC	C1608 SH 1H 330J-T-A
C4	4030007800	S.CERAMIC	C1608 SH 1H 330J-T-A
C6	4030006860	S.CERAMIC	C1608 JB 1H 102K-T-A
C7	4030006880	S.CERAMIC	C1608 JB 1H 472K-T-A
C8	4030006860	S.CERAMIC	C1608 JB 1H 102K-T-A
C9	4030006860	S.CERAMIC	C1608 JB 1H 102K-T-A
C10	4030006860	S.CERAMIC	C1608 JB 1H 102K-T-A
C11	4030007020	S.CERAMIC	C1608 CH 1H 120J-T-A
C12	4030007750	S.CERAMIC	C1608 SH 1H 120J-T-A
C13	4030007750	S.CERAMIC	C1608 SH 1H 120J-T-A
C14	4030009570	S.CERAMIC	C1608 CH 1H 0R3B-T-A
C15	4030007090	S.CERAMIC	C1608 CH 1H 470J-T-A
C16	4030006880	S.CERAMIC	C1608 JB 1H 472K-T-A
C17	4030006880	S.CERAMIC	C1608 JB 1H 472K-T-A
C18	4030006860	S.CERAMIC	C1608 JB 1H 102K-T-A
C19	4030008560	S.CERAMIC	C1608 CH 1H 300J-T-A
C20	4030006960	S.CERAMIC	C1608 CH 1H 050C-T-A
C21	4030006860	S.CERAMIC	C1608 JB 1H 102K-T-A
C23	4030006860	S.CERAMIC	C1608 JB 1H 102K-T-A
C24	4030006860	S.CERAMIC	C1608 JB 1H 102K-T-A
C25	4030006860	S.CERAMIC	C1608 JB 1H 102K-T-A
C26	4030006850	S.CERAMIC	C1608 JB 1H 471K-T-A
C27	4030006860	S.CERAMIC	C1608 JB 1H 102K-T-A
C28	4030006860	S.CERAMIC	C1608 JB 1H 102K-T-A
C29	4030006860	S.CERAMIC	C1608 JB 1H 102K-T-A
C30	4030006850	S.CERAMIC	C1608 JB 1H 471K-T-A
C31	4030006860	S.CERAMIC	C1608 JB 1H 102K-T-A
C32	4610001910	S.TRIMMER	CTZ3E-10A-W1
C33	4030006850	S.CERAMIC	C1608 JB 1H 471K-T-A
C34	4030006860	S.CERAMIC	C1608 JB 1H 102K-T-A
C35	4030006850	S.CERAMIC	C1608 JB 1H 471K-T-A
C36	4030006860	S.CERAMIC	C1608 JB 1H 102K-T-A
C37	4610001910	S.TRIMMER	CTZ3E-10A-W1
C38	4030006980	S.CERAMIC	C1608 CH 1H 070D-T-A
C39	4030006980	S.CERAMIC	C1608 CH 1H 070D-T-A
C40	4030006850	S.CERAMIC	C1608 JB 1H 471K-T-A
C41	4030006860	S.CERAMIC	C1608 JB 1H 102K-T-A

S.=Surface mount

Downloaded from www.Manualslib.com manuals search engine

[RF-B UNIT]

REF. NO.	ORDER NO.	DESCRIPTION	
C42	4510004640	S.ELECTROLITIC	ECEV1CA470SP
C43	4030006860	S.CERAMIC	C1608 JB 1H 102K-T-A
C44	4030006860	S.CERAMIC	C1608 JB 1H 102K-T-A
C45	4030006880	S.CERAMIC	C1608 JB 1H 472K-T-A
C46	4030006860	S.CERAMIC	C1608 JB 1H 102K-T-A
C47	4030006860	S.CERAMIC	C1608 JB 1H 102K-T-A
C48	4030007020	S.CERAMIC	C1608 CH 1H 120J-T-A
C50	4030007040	S.CERAMIC	C1608 CH 1H 180J-T-A
C51	4030006940	S.CERAMIC	C1608 CH 1H 030C-T-A
C52	4030007020	S.CERAMIC	C1608 CH 1H 120J-T-A
C53	4030006850	S.CERAMIC	C1608 JB 1H 471K-T-A
C54	4030006860	S.CERAMIC	C1608 JB 1H 102K-T-A
C55	4030007000	S.CERAMIC	C1608 CH 1H 090D-T-A
C56	4030007010	S.CERAMIC	C1608 CH 1H 100D-T-A
C57	4030006860	S.CERAMIC	C1608 JB 1H 102K-T-A
C58	4030007010	S.CERAMIC	C1608 CH 1H 100D-T-A
C59	4030006920	S.CERAMIC	C1608 CH 1H 010C-T-A
C60	4030007010	S.CERAMIC	C1608 CH 1H 100D-T-A
C61	4030006880	S.CERAMIC	C1608 JB 1H 472K-T-A
C62	4030006880	S.CERAMIC	C1608 JB 1H 472K-T-A
C63	4030006880	S.CERAMIC	C1608 JB 1H 472K-T-A
C64	4030006860	S.CERAMIC	C1608 JB 1H 102K-T-A
C66	4030006880	S.CERAMIC	C1608 JB 1H 472K-T-A
C67	4030006880	S.CERAMIC	C1608 JB 1H 472K-T-A
C68	4030006860	S.CERAMIC	C1608 JB 1H 102K-T-A
C69	4030006860	S.CERAMIC	C1608 JB 1H 102K-T-A
C70	4030006860	S.CERAMIC	C1608 JB 1H 102K-T-A
C71	4030006860	S.CERAMIC	C1608 JB 1H 102K-T-A
C72	4030006880	S.CERAMIC	C1608 JB 1H 472K-T-A
C73	4030006860	S.CERAMIC	C1608 JB 1H 102K-T-A
C74	4030006880	S.CERAMIC	C1608 JB 1H 472K-T-A
C75	4030006860	S.CERAMIC	C1608 JB 1H 102K-T-A
C76	4030006860	S.CERAMIC	C1608 JB 1H 102K-T-A
C77	4030006880	S.CERAMIC	C1608 JB 1H 472K-T-A
C78	4030006860	S.CERAMIC	C1608 JB 1H 102K-T-A
C79	4030007100	S.CERAMIC	C1608 CH 1H 560J-T-A
C81	4030006940	S.CERAMIC	C1608 CH 1H 030C-T-A
C84	4030007050	S.CERAMIC	C1608 CH 1H 220J-T-A
C85	4030006880	S.CERAMIC	C1608 JB 1H 472K-T-A
C86	4030006980	S.CERAMIC	C1608 CH 1H 070D-T-A
C87	4030006960	S.CERAMIC	C1608 CH 1H 050C-T-A
C88	4030006880	S.CERAMIC	C1608 JB 1H 472K-T-A
C89	4030006880	S.CERAMIC	C1608 JB 1H 472K-T-A
C90	4030006980	S.CERAMIC	C1608 CH 1H 070D-T-A
C91	4030006960	S.CERAMIC	C1608 CH 1H 050C-T-A
C92	4030006880	S.CERAMIC	C1608 JB 1H 472K-T-A
C93	4030006880	S.CERAMIC	C1608 JB 1H 472K-T-A
C97	4030006880	S.CERAMIC	C1608 JB 1H 472K-T-A
C98	4030006860	S.CERAMIC	C1608 JB 1H 102K-T-A
C99	4030006860	S.CERAMIC	C1608 JB 1H 102K-T-A
C100	4030006860	S.CERAMIC	C1608 JB 1H 102K-T-A
C101	4030006860	S.CERAMIC	C1608 JB 1H 102K-T-A
C102	4030006860	S.CERAMIC	C1608 JB 1H 102K-T-A
C103	4030006860	S.CERAMIC	C1608 JB 1H 102K-T-A
C104	4030007090	S.CERAMIC	C1608 CH 1H 470J-T-A
C105	4030006930	S.CERAMIC	C1608 CH 1H 020C-T-A
C106	4030007000	S.CERAMIC	C1608 CH 1H 090D-T-A
C107	4030006860	S.CERAMIC	C1608 JB 1H 102K-T-A
C108	4610001880	S.TRIMMER	CTZ3E-03A-W1
C109	4030006920	S.CERAMIC	C1608 CH 1H 010C-T-A
C111	4030009560	S.CERAMIC	C1608 CH 1H R75B-T-A
C112	4030007000	S.CERAMIC	C1608 CH 1H 090D-T-A
C113	4030006860	S.CERAMIC	C1608 JB 1H 102K-T-A
C114	4610001880	S.TRIMMER	CTZ3E-03A-W1
C115	4030009560	S.CERAMIC	C1608 CH 1H R75B-T-A
C117	4030009560	S.CERAMIC	C1608 CH 1H R75B-T-A
C118	4030007010	S.CERAMIC	C1608 CH 1H 100D-T-A
C119	4030006860	S.CERAMIC	C1608 JB 1H 102K-T-A
C120	4610001880	S.TRIMMER	CTZ3E-03A-W1
C121	4030006860	S.CERAMIC	C1608 JB 1H 102K-T-A
C122	4030006860	S.CERAMIC	C1608 JB 1H 102K-T-A
C123	4030006850	S.CERAMIC	C1608 JB 1H 471K-T-A
C124	4030006860	S.CERAMIC	C1608 JB 1H 102K-T-A
C125	4030006850	S.CERAMIC	C1608 JB 1H 471K-T-A
C126	4030006860	S.CERAMIC	C1608 JB 1H 102K-T-A
C127	4030006850	S.CERAMIC	C1608 JB 1H 471K-T-A

[RF-B UNIT]

REF. NO.	ORDER NO.	DESCRIPTION	
C128	4030006860	S.CERAMIC	C1608 JB 1H 102K-T-A
C130	4030006980	S.CERAMIC	C1608 CH 1H 070D-T-A
C131	4030006860	S.CERAMIC	C1608 JB 1H 102K-T-A
C132	4610001880	S.TRIMMER	CTZ3E-03A-W1
C133	4030006860	S.CERAMIC	C1608 JB 1H 102K-T-A
C134	4030006850	S.CERAMIC	C1608 JB 1H 471K-T-A
C135	4030006860	S.CERAMIC	C1608 JB 1H 102K-T-A
C137	4030006970	S.CERAMIC	C1608 CH 1H 060D-T-A
C138	4030006860	S.CERAMIC	C1608 JB 1H 102K-T-A
C139	4030008560	S.CERAMIC	C1608 CH 1H 300J-T-A
C140	4030006850	S.CERAMIC	C1608 JB 1H 471K-T-A
C141	4030006860	S.CERAMIC	C1608 JB 1H 102K-T-A
C142	4030007010	S.CERAMIC	C1608 CH 1H 100D-T-A
C144	4030008960	S.CERAMIC	C2012 JB 1C 104K-T-A
C145	4030006860	S.CERAMIC	C1608 JB 1H 102K-T-A
C146	4030006860	S.CERAMIC	C1608 JB 1H 102K-T-A
C147	4030006860	S.CERAMIC	C1608 JB 1H 102K-T-A
C149	4030006960	S.CERAMIC	C1608 CH 1H 050C-T-A
C150	4030006960	S.CERAMIC	C1608 CH 1H 050C-T-A
C151	4030007090	S.CERAMIC	C1608 CH 1H 470J-T-A
C152	4030007090	S.CERAMIC	C1608 CH 1H 470J-T-A
C153	4030007040	S.CERAMIC	C1608 CH 1H 180J-T-A
C154	4030006980	S.CERAMIC	C1608 CH 1H 070D-T-A
C155	4030007040	S.CERAMIC	C1608 CH 1H 180J-T-A
C156	4030007090	S.CERAMIC	C1608 CH 1H 470J-T-A
C157	4030007090	S.CERAMIC	C1608 CH 1H 470J-T-A
C158	4030007090	S.CERAMIC	C1608 CH 1H 470J-T-A
C159	4030007090	S.CERAMIC	C1608 CH 1H 470J-T-A
C160	4030007090	S.CERAMIC	C1608 CH 1H 470J-T-A
C161	4030007090	S.CERAMIC	C1608 CH 1H 470J-T-A
C162	4030007090	S.CERAMIC	C1608 CH 1H 470J-T-A
C163	4030006860	S.CERAMIC	C1608 JB 1H 102K-T-A
C164	4030009570	S.CERAMIC	C1608 CH 1H 0R3B-T-A
C165	4030006860	S.CERAMIC	C1608 JB 1H 102K-T-A
C166	4030006860	S.CERAMIC	C1608 JB 1H 102K-T-A
C167	4030006960	S.CERAMIC	C1608 CH 1H 050C-T-A
C168	4030006860	S.CERAMIC	C1608 JB 1H 102K-T-A
C169	4030006860	S.CERAMIC	C1608 JB 1H 102K-T-A
C170	4030006860	S.CERAMIC	C1608 JB 1H 102K-T-A
C171	4030007050	S.CERAMIC	C1608 CH 1H 220J-T-A
C172	4030007050	S.CERAMIC	C1608 CH 1H 220J-T-A
C173	4030007050	S.CERAMIC	C1608 CH 1H 220J-T-A
C174	4030007050	S.CERAMIC	C1608 CH 1H 220J-T-A
C175	4030007050	S.CERAMIC	C1608 CH 1H 220J-T-A
C176	4030007050	S.CERAMIC	C1608 CH 1H 220J-T-A
C177	4030007050	S.CERAMIC	C1608 CH 1H 220J-T-A
C178	4030009520	S.CERAMIC	C1608 CH 1H 020B-T-A
C179	4030009520	S.CERAMIC	C1608 CH 1H 020B-T-A
J3	6510003250	CONNECTOR	TMP-J01X-A2
J4	6510003250	CONNECTOR	TMP-J01X-A2
J5	6510003250	CONNECTOR	TMP-J01X-A2
J6	6510006360	CONNECTOR	TMP-J02X-A1
J7	6510007020	CONNECTOR	TMP-J01X-V6
J8	6510018860	CONNECTOR	52030-0810
W5	7030003860	S.JUMPER	ERJ3GE JPW V
W6	7030003860	S.JUMPER	ERJ3GE JPW V
W7	7030003860	S.JUMPER	ERJ3GE JPW V
W8	7030003860	S.JUMPER	ERJ3GE JPW V
W10	7030003860	S.JUMPER	ERJ3GE JPW V
EP1	0910040366	PCB	B 4016F

S.=Surface mount

Downloaded from www.Manualslib.com manuals search engine

[PA UNIT]

REF. NO.	ORDER NO.	DESCRIPTION	
IC1	1150000840	IC	SC-1114
IC2	1150000830	IC	SC-1113
IC3	1150000140	IC	SC-1016
D1	1710000010	DIODE	15CD11
S1	6910000050	THERMAL	OHD-3 50M
MF1	2710000480	FAN	MF40C-12H004
J1	6510004910	CONNECTOR	NR-DS-E 01
J2	6510004880	CONNECTOR	MR-DS-E 01
SP1	2510000040	SPEAKER	C065K12I0810

[PA-A UNIT]

REF. NO.	ORDER NO.	DESCRIPTION	
D1	1710000310	DIODE	MI407
D2	1710000290	DIODE	MI308
D3	1710000290	DIODE	MI308
D4	1790001460	DIODE	1SS165
D5	1790001460	DIODE	1SS165
D6	1790001460	DIODE	1SS165
D7	1790001460	DIODE	1SS165
L1	6170000070	COIL	LW-9
L2	6170000230	COIL	LW-25
L3	6110001670	COIL	LA-253
L4	6110001740	COIL	LA-263
L5	6110001740	COIL	LA-263
L6	6110001550	COIL	LA-235
L7	6110001550	COIL	LA-235
L8	6110001740	COIL	LA-263
L9	6170000180	COIL	LW-19
L10	6910000670	COIL	BL01RN1-A62-001
L11	6910000670	COIL	BL01RN1-A62-001
L12	6180000880	COIL	LAL 03NA 100K
L13	6910000670	COIL	BL01RN1-A62-001
L14	6110001670	COIL	LA-253
R1	7080000150	RESISTOR	RGB3L R15
R2	7010004310	RESISTOR	R20J 8.2 kΩ
R3	7010004310	RESISTOR	R20J 8.2 kΩ
R4	7010003480	RESISTOR	ELR20J 4.7 kΩ
R5	7010003480	RESISTOR	ELR20J 4.7 kΩ
R8	7010004740	RESISTOR	R50XJ 150 Ω
R9	7010004740	RESISTOR	R50XJ 150 Ω
R10	7010001150	RESISTOR	R25XJ 1 kΩ
R12	7080000150	RESISTOR	RGB3L R15
R13	7010004220	RESISTOR	R20J 1.8 kΩ
C1	4010000520	CERAMIC	DD107-601 B 472K 50V
C2	4010000500	CERAMIC	DD104 B 102K 50V
C3	4040000690	BARRIERLAYR	UAT 08X 473K
C4	4010004120	CERAMIC	DD07 B 102K 500V
C5	4010005500	CERAMIC	HM60SJ CH 150J 500V
C6	4010008080	CERAMIC	HM60SJ CH 300J 500V
C7	4010008080	CERAMIC	HM60SJ CH 300J 500V
C8	4010005500	CERAMIC	HM60SJ CH 150J 500V
C9	4010004120	CERAMIC	DD07 B 102K 500V
C10	4010000200	CERAMIC	DD104 SL 270J 50V
C11	4010000090	CERAMIC	DD104 SL 070D 50V
C12	4010000330	CERAMIC	DD104 SL 101J 50V

[PA-A UNIT]

REF. NO.	ORDER NO.	DESCRIPTION	
C13	4010005500	CERAMIC	HM60SJ CH 150J 500V
C14	4010008060	CERAMIC	HM60SJ CH 200J 500V
C15	4010004120	CERAMIC	DD07 B 102K 500V
C17	4010005480	CERAMIC	HM60SJ CH 100D 500V
C18	4010000500	CERAMIC	DD104 B 102K 50V
C19	4010000500	CERAMIC	DD104 B 102K 50V
C20	4010000500	CERAMIC	DD104 B 102K 50V
C21	4010000500	CERAMIC	DD104 B 102K 50V
C22	4010000520	CERAMIC	DD107-601 B 472K 50V
C23	4010000500	CERAMIC	DD104 B 102K 50V
C24	4010000520	CERAMIC	DD107-601 B 472K 50V
C25	4510003890	ELECTROLITIC	16 MV 10 HW
C26	4010000500	CERAMIC	DD104 B 102K 50V
C27	4010000520	CERAMIC	DD107-601 B 472K 50V
C28	4510004590	ELECTROLITIC	16 MV 470 HC
C29	4010000520	CERAMIC	DD107-601 B 472K 50V
C30	4010000500	CERAMIC	DD104 B 102K 50V
C31	4010000520	CERAMIC	DD107-601 B 472K 50V
C32	4010000500	CERAMIC	DD104 B 102K 50V
C33	4510004590	ELECTROLITIC	16 MV 470 HC
C34	4010000500	CERAMIC	DD104 B 102K 50V
C35	4010000500	CERAMIC	DD104 B 102K 50V
C37	4010000500	CERAMIC	DD104 B 102K 50V
C38	4010000500	CERAMIC	DD104 B 102K 50V
C39	4010000500	CERAMIC	DD104 B 102K 50V
C40	4010000500	CERAMIC	DD104 B 102K 50V
C41	4010005500	CERAMIC	HM60SJ CH 150J 500V
C42	4010005500	CERAMIC	HM60SJ CH 150J 500V
C43	4010005500	CERAMIC	HM60SJ CH 150J 500V
C44	4550000260	TANTALUM	DN 1V 100M
J1	6510003410	CONNECTOR	B05B-EH-S
J4	6510003100	CONNECTOR	RT01T-1.3B
J5	6510003100	CONNECTOR	RT01T-1.3B
J6	6510003100	CONNECTOR	RT01T-1.3B
W2	6910001020	JUMPER	IPS-1041-2
W3	6910001020	JUMPER	IPS-1041-2
W4	6910001020	JUMPER	IPS-1041-2
W5	6910001020	JUMPER	IPS-1041-2
W6	6910001020	JUMPER	IPS-1041-2
W7	6910001020	JUMPER	IPS-1041-2
W8	6910001020	JUMPER	IPS-1041-2
W9	6910001020	JUMPER	IPS-1041-2
W10	6910001020	JUMPER	IPS-1041-2
W11	6910001020	JUMPER	IPS-1041-2
W12	6910001030	JUMPER	IPS-1041-4
W15	6910001030	JUMPER	IPS-1041-4
W16	6910001030	JUMPER	IPS-1041-4
W18	8900004480	CABLE	OPC-451 D
W19	8900004490	CABLE	OPC-451 E
EP2	0910040374	PCB	B 4017D

[PA-B UNIT]

REF. NO.	ORDER NO.	DESCRIPTION	
D1	1710000310	DIODE	MI407
D2	1710000730	S.DIODE	MI809-T11
D3	1710000730	S.DIODE	MI809-T11
D4	1790000490	S.DIODE	HSM88AS-TR
D5	1790000490	S.DIODE	HSM88AS-TR
L1	6110001650	COIL	LA-248
L3	6110002110	COIL	LA-382
L4	6110002110	COIL	LA-382
L5	6110001520	COIL	LA-232
L6	6110001520	COIL	LA-232

S.=Surface mount

Downloaded from www.Manualslib.com manuals search engine

[PA-B UNIT]

REF. NO.	ORDER NO.	DESCRIPTION	
L7	6110001520	COIL	LA-232
L8	6110001600	COIL	LA-243
L9	6110002110	COIL	LA-382
L10	6110001650	COIL	LA-248
L11	6200001830	S.COIL	NL 322522T-100J
L12	6200001830	S.COIL	NL 322522T-100J
L13	6910000670	COIL	BL01RN1-A62-001
L14	6910000670	COIL	BL01RN1-A62-001
L15	6110001520	COIL	LA-232
L16	6110001650	COIL	LA-248
L17	6110001520	COIL	LA-232
L18	6110001520	COIL	LA-232
R1	7080000150	RESISTOR	RGB3L R15
R2	7030003550	S.RESISTOR	ERJ3GEYJ 822 V (8.2 kΩ)
R3	7030003440	S.RESISTOR	ERJ3GEYJ 102 V (1 kΩ)
R4	7030003550	S.RESISTOR	ERJ3GEYJ 822 V (8.2 kΩ)
R5	7030003440	S.RESISTOR	ERJ3GEYJ 102 V (1 kΩ)
R8	7030001150	S.RESISTOR	MCR50JZHJ 150 Ω (151)
R9	7030001150	S.RESISTOR	MCR50JZHJ 150 Ω (151)
R10	7030003440	S.RESISTOR	ERJ3GEYJ 102 V (1 kΩ)
R11	7030003440	S.RESISTOR	ERJ3GEYJ 102 V (1 kΩ)
R13	7030001140	S.RESISTOR	MCR50JZHJ 120 Ω (121)
R14	7030001090	S.RESISTOR	MCR50JZHJ 47 Ω (470)
R15	7030001140	S.RESISTOR	MCR50JZHJ 120 Ω (121)
R16	7080000150	RESISTOR	RGB3L R15
R17	7030003320	S.RESISTOR	ERJ3GEYJ 101 V (100 Ω)
R18	7030003480	S.RESISTOR	ERJ3GEYJ 222 V (2.2 kΩ)
R19	7030003480	S.RESISTOR	ERJ3GEYJ 222 V (2.2 kΩ)
C1	4030006880	S.CERAMIC	C1608 JB 1H 472K-T-A
C2	4030007090	S.CERAMIC	C1608 CH 1H 470J-T-A
C3	4030006860	S.CERAMIC	C1608 JB 1H 102K-T-A
C5	4010005460	CERAMIC	HM60SJ CH 080D 500V
C6	4010005460	CERAMIC	HM60SJ CH 080D 500V
C7	4010005460	CERAMIC	HM60SJ CH 080D 500V
C8	4010005460	CERAMIC	HM60SJ CH 080D 500V
C9	4010005440	CERAMIC	HM60SJ CH 060D 500V
C10	4010005440	CERAMIC	HM60SJ CH 060D 500V
C12	4030007020	S.CERAMIC	C1608 CH 1H 120J-T-A
C14	4030007000	S.CERAMIC	C1608 CH 1H 090D-T-A
C15	4030007030	S.CERAMIC	C1608 CH 1H 150J-T-A
C16	4030007030	S.CERAMIC	C1608 CH 1H 150J-T-A
C17	4030007020	S.CERAMIC	C1608 CH 1H 120J-T-A
C18	4010005420	CERAMIC	HM60SJ CH 040C 500V
C21	4010005430	CERAMIC	HM60SJ CH 050C 500V
C22	4010005400	CERAMIC	HM60SJ CK 020C 500V
C23	4030006850	S.CERAMIC	C1608 JB 1H 471K-T-A
C24	4030006850	S.CERAMIC	C1608 JB 1H 471K-T-A
C25	4030006860	S.CERAMIC	C1608 JB 1H 102K-T-A
C26	4030006850	S.CERAMIC	C1608 JB 1H 471K-T-A
C27	4030006860	S.CERAMIC	C1608 JB 1H 102K-T-A
C28	4030006850	S.CERAMIC	C1608 JB 1H 471K-T-A
C29	4030006860	S.CERAMIC	C1608 JB 1H 102K-T-A
C30	4510004630	S.ELECTROLITIC	ECEV1CA100SR
C31	4030006860	S.CERAMIC	C1608 JB 1H 102K-T-A
C32	4030006850	S.CERAMIC	C1608 JB 1H 471K-T-A
C33	4510004590	ELECTROLITIC	16 MV 470 HC
C34	4030006860	S.CERAMIC	C1608 JB 1H 102K-T-A
C35	4030006850	S.CERAMIC	C1608 JB 1H 471K-T-A
C36	4030007090	S.CERAMIC	C1608 CH 1H 470J-T-A
C37	4030007090	S.CERAMIC	C1608 CH 1H 470J-T-A
C38	4030006850	S.CERAMIC	C1608 JB 1H 471K-T-A
C39	4030006860	S.CERAMIC	C1608 JB 1H 102K-T-A
C40	4510004590	ELECTROLITIC	16 MV 470 HC
C41	4030006860	S.CERAMIC	C1608 JB 1H 102K-T-A
C42	4030006860	S.CERAMIC	C1608 JB 1H 102K-T-A
C44	4030007090	S.CERAMIC	C1608 CH 1H 470J-T-A
C45	4030006860	S.CERAMIC	C1608 JB 1H 102K-T-A
C46	4030007090	S.CERAMIC	C1608 CH 1H 470J-T-A
C47	4010005480	CERAMIC	HM60SJ CH 100D 500V
C48	4010005470	CERAMIC	HM60SJ CH 090D 500V
C51	4030006860	S.CERAMIC	C1608 JB 1H 102K-T-A
C52	4510005310	S.ELECTROLITIC	ECEV1CA220SR

[PA-B UNIT]

REF. NO.	ORDER NO.	DESCRIPTION	
C53	4510005310	S.ELECTROLITIC	ECEV1CA220SR
C54	4030006860	S.CERAMIC	C1608 JB 1H 102K-T-A
C55	4510006220	S.ELECTROLITIC	ECEV1CA101UP
C56	4030006860	S.CERAMIC	C1608 JB 1H 102K-T-A
C57	4010004120	CERAMIC	DD07 B 102K 500V
C59	4010005430	CERAMIC	HM60SJ CH 050C 500V
C60	4030006960	S.CERAMIC	C1608 CH 1H 050C-T-A
C61	4030006850	S.CERAMIC	C1608 JB 1H 471K-T-A
C62	4030006850	S.CERAMIC	C1608 JB 1H 471K-T-A
C63	4030006850	S.CERAMIC	C1608 JB 1H 471K-T-A
C64	4030006850	S.CERAMIC	C1608 JB 1H 471K-T-A
C65	4030006850	S.CERAMIC	C1608 JB 1H 471K-T-A
C66	4030006860	S.CERAMIC	C1608 JB 1H 102K-T-A
C67	4010005430	CERAMIC	HM60SJ CH 050C 500V
C68	4010005420	CERAMIC	HM60SJ CH 040C 500V
C69	4010005420	CERAMIC	HM60SJ CH 040C 500V
C70	4010005420	CERAMIC	HM60SJ CH 040C 500V
C71	4010005420	CERAMIC	HM60SJ CH 040C 500V
C72	4010005500	CERAMIC	HM60SJ CH 150J 500V
C73	4010008050	CERAMIC	HM60SJ CH 180J 500V
C74	4550000260	TANTALUM	DN 1V 100M
F1	5210000180	FUSE	FGMB 125V 5A
F2	6510018320	HOLDER	F09P
J1	6510003420	CONNECTOR	B06B-EH-S
EP1	6510018330	TERMINAL	F4053A
EP2	6510018330	TERMINAL	F4053A
EP3	0910047561	PCB	B 4819A

S.=Surface mount

Downloaded from www.Manualslib.com manuals search engine

SECTION 7 MECHANICAL PARTS

[FRONT PARTS]

REF. NO.	ORDER NO.	DESCRIPTION	QTY.
J1	6510000290	Connector 8S-S-E [MIC] (incl. nut, J1-1)	1
J1-1	8850000770	Spring washer 8S-S-E 16	1
S1	2260001580	Switch JPZ2120-0101 [POWER]	1
S2	2250000330	Encoder SW-163 [TUNING DIAL] (incl. nut, washer)	1
WS1	8600035050	Cable P01FRA [USA], [AUS]	1
	8600035060	Cable P01FRB [EUR], [SWE]	1
EP1	0910041880	Flexible PCB B 4178	1
EP2	6450001230	Snap plate HLJ0999-01-480	1
ME1	5510000420	Meter ME-34 [S/RF METER]	1
MP1	8210013950	1424 front panel -1	1
MP2	8310032860	1424 window plate (A)	1
MP3	8010015281	1424 sub chassis -1	1
MP4	8610008510	Knob N-45 (D)	3
MP5	8610008500	Knob N-69 (A)	3
MP6	8610009230	Knob N-213	1
MP7	8610009170	Knob N-213 cover	1
MP13	8610009090	Button K-201 (A)	1
MP14	8610008431	Button K-202 -1	1
MP17	8930013940	610 knob sheet	1
MP18	8930014030	610 brake pad	1
MP19	8930013990	610 brake plate	1
MP20	8820000770	1296 screw	1
MP21	8930030480	Spacer (P)	1
MP23	8930030480	1424 button plate	1
MP24	8810008640	Screw FH BT No.0 M2 x 4 NI-ZU	5
MP25	8810008640	Screw FH BT No.0 M2 x 4 NI-ZU	4
MP26	8810002170	Screw FH BT M3 x 6	7
MP27	8810002170	Screw FH BT M3 x 6	2
MP28	8810002170	Screw FH BT M3 x 6	4
MP29	8810000980	Screw PH BT M2 x 4	1
MP31	8810000980	Screw PH BT M2 x 4	3
MP32	8930027960	1296 brake spring	1
MP33	8850001330	Insulation flat washer (M)	1
MP34	8810000210	Screw PH BT M3 x 4	1
MP35	8810003360	Setscrew C M3 x 6	1
MP36	8930031160	1424 sponge (B)	1
MP37	8930032030	Insulation plate DE	2
MP39	8930032370	Shaft tape (A)	3
MP40	8930032490	Bifacial tape (L)	1
MP44	8930040430	1886 13-key	1
MP45	8930040420	1886 9-key	1

[DISP UNIT]

REF. NO.	ORDER NO.	DESCRIPTION	QTY.
DS1	5030001390	LCD FTD-15518ABH	1
W4	8900005930	Cable OPC-586	1
W5	8900004810	Cable OPC-467	1
W6	8900004840	Cable OPC-470	1
W7	8900004850	Cable OPC-471	1
W8	8900004850	Cable OPC-471	1
W9	8900004850	Cable OPC-471	1
W10	8900006880	Cable OPC-658	1

[DISP UNIT]

REF. NO.	ORDER NO.	DESCRIPTION	QTY.
EP2	8930031220	LCD contact SCRN-1424 SSW	1
MP1	8210009490	1424 reflector	1
MP2	8930029570	1424 LCD holder	1
MP3	8930029560	1424 LCD rubber	1
MP4	8930030460	1424 LCD filter	1
MP5	8930031150	1424 sponge (A)	1
MP6	8930032500	1424 mask sheet	1

[VR BOARD (MAIN)]

REF. NO.	ORDER NO.	DESCRIPTION	QTY.
R1	7210002410	Variable resistor RV-285 (incl. nut, washer)	1

[VR BOARD (SUB)]

REF. NO.	ORDER NO.	DESCRIPTION	QTY.
R1	7210002410	Variable resistor RV-285 (incl. nut, washer)	1

[RIT BOARD]

REF. NO.	ORDER NO.	DESCRIPTION	QTY.
R1	7210002420	Variable resistor RV-286 (incl. nut, washer)	1

[CHASSIS PARTS]

REF. NO.	ORDER NO.	DESCRIPTION	QTY.
MP9	8810000210	Screw PH BT M3 x 4	4

[COVER PARTS]

REF. NO.	ORDER NO.	DESCRIPTION	QTY.
MP1 *	8110005150	1424 U-cover	1
MP2	8110005060	610 cover (bottom)	1
MP3 *	8930006370	401 net	1
MP4	8010001520	Stand (C)	1
MP5	8930005790	Collar foot (A)	1
MP6	8930005800	Collar foot (B)	1
MP7	8930002900	Rubber foot (A)	2
MP8	8810005520	Screw PH BT B1 M3 x 8 ZK	4
MP9	8810005540	Screw PH BT B1 M4 x10	2
MP10	8810009430	Screw FH BT M3 x 6 ZK	16
MP14 *	8930032330	1413 A-sheet	1
	8110005320	Assembled U-cover (MP1 + MP3 + MP14)	1

Screw abbreviations
BT: Self-tapping
PH: Pan head
FH: Flat head
NI-ZU: Nickel-zinc

Downloaded from www.Manualslib.com manuals search engine

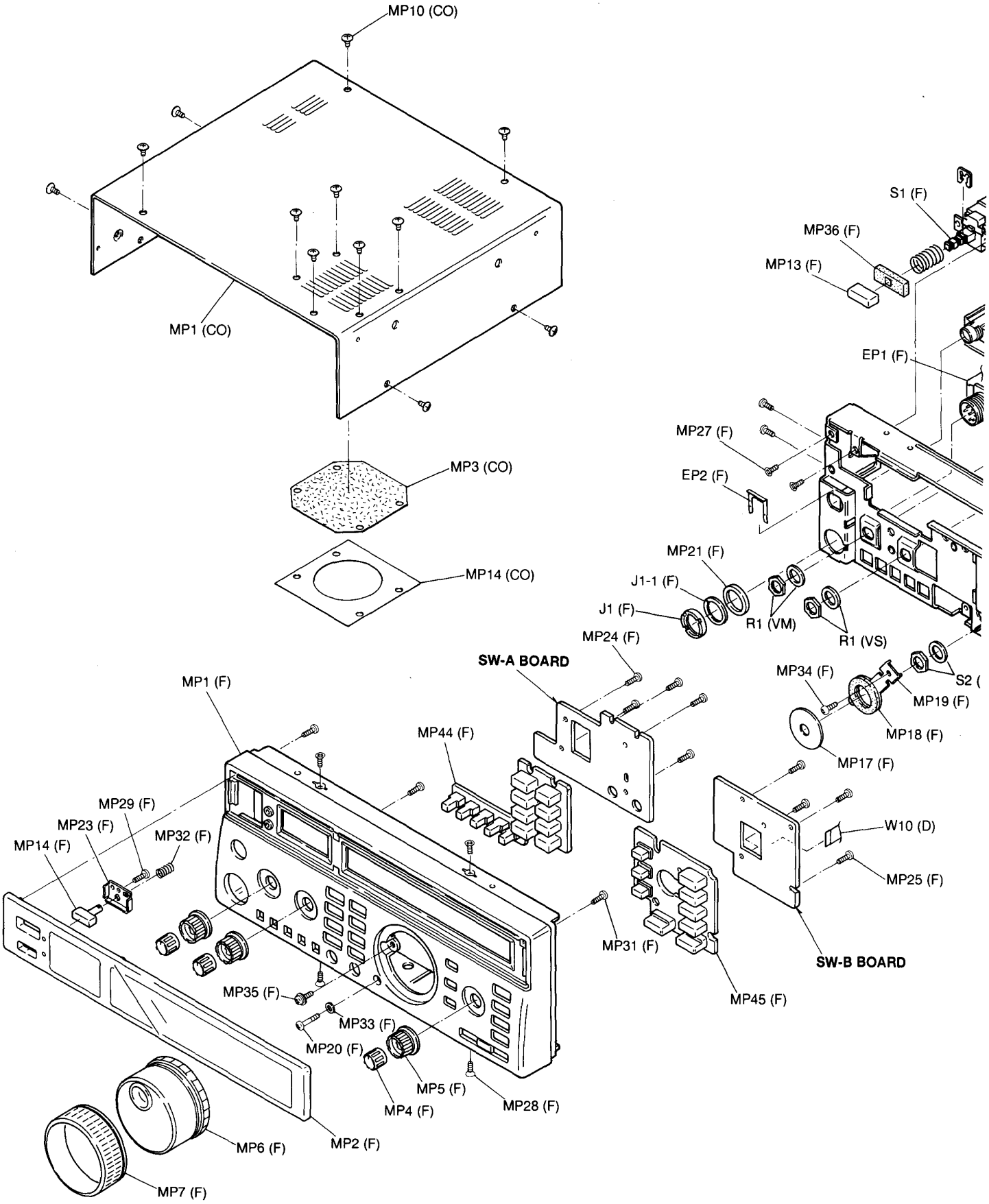

Unit abbreviations (F): FRONT PARTS (D): DISP L
(RI): RIT BOARD (CH): CHASS

Downloaded from www.Manualslib.com manuals search engine

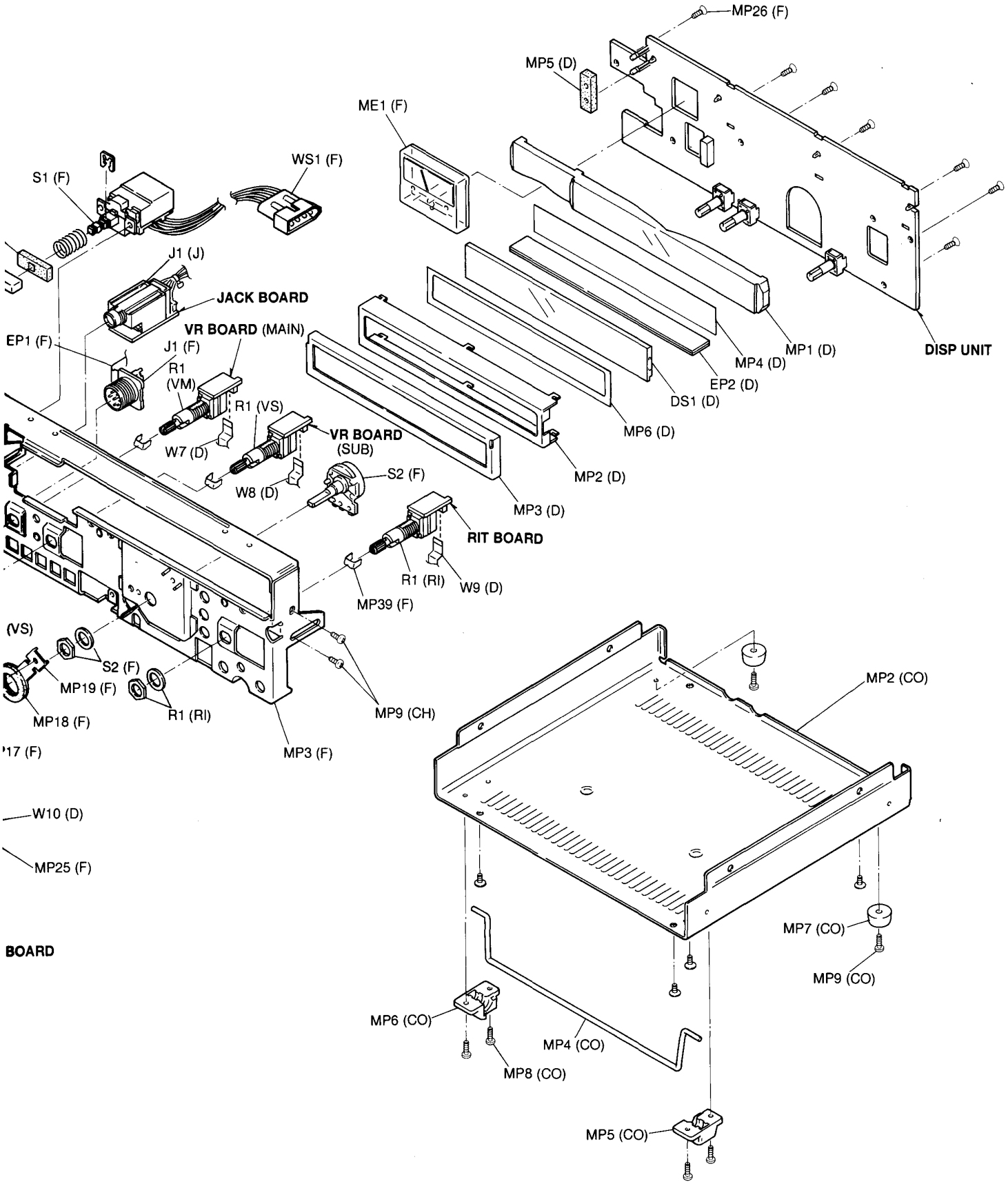

RTS (D): DISP UNIT (VM): VR BOARD (MAIN) (VS): VR BOARD (SUB)
D (CH): CHASSIS PARTS (CO): COVER PARTS (J): JACK BOARD

Downloaded from www.Manualslib.com manuals search engine

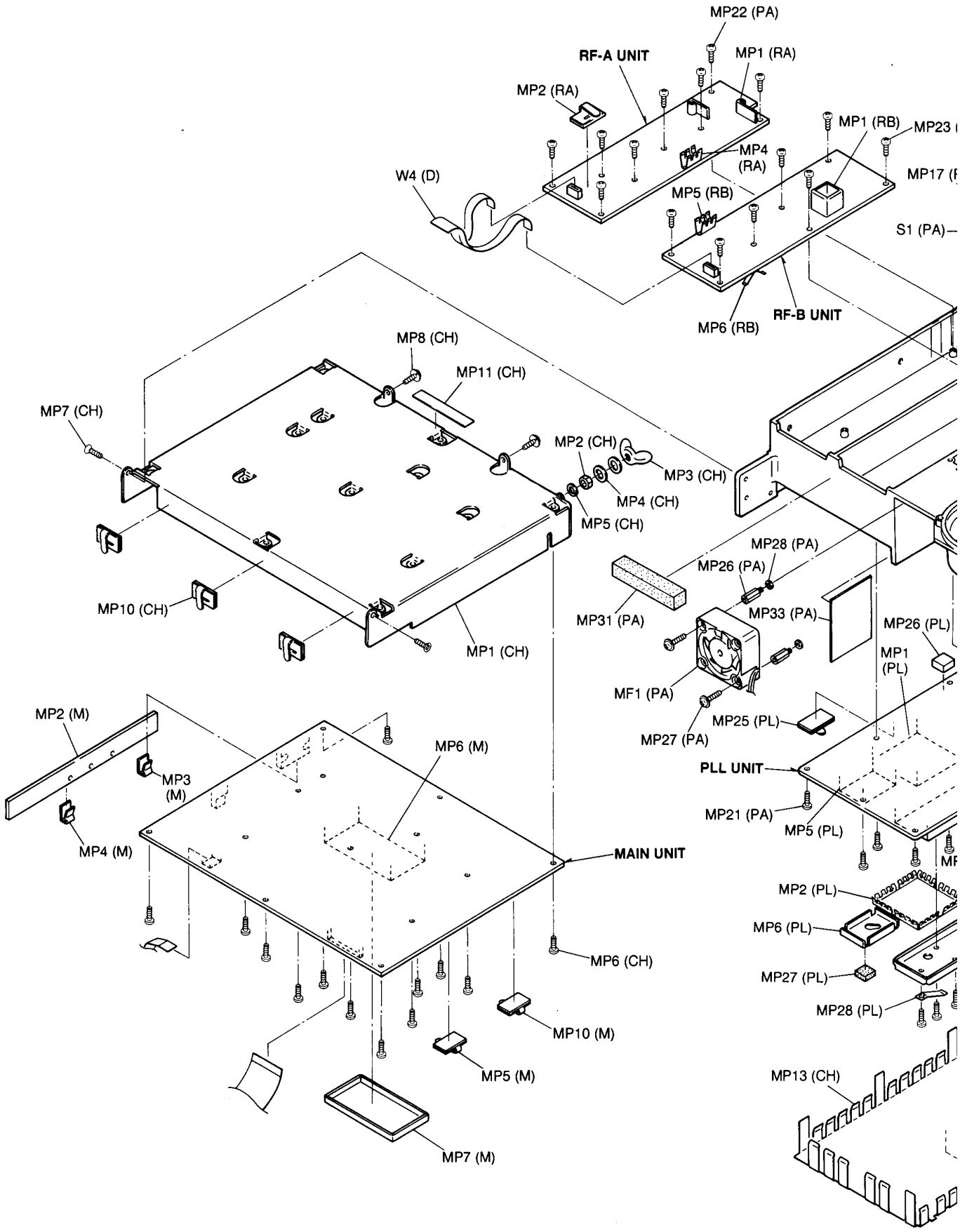

Unit abbreviations (D): DISP UNIT (PL): PLL

Downloaded from www.Manualslib.com manuals search engine

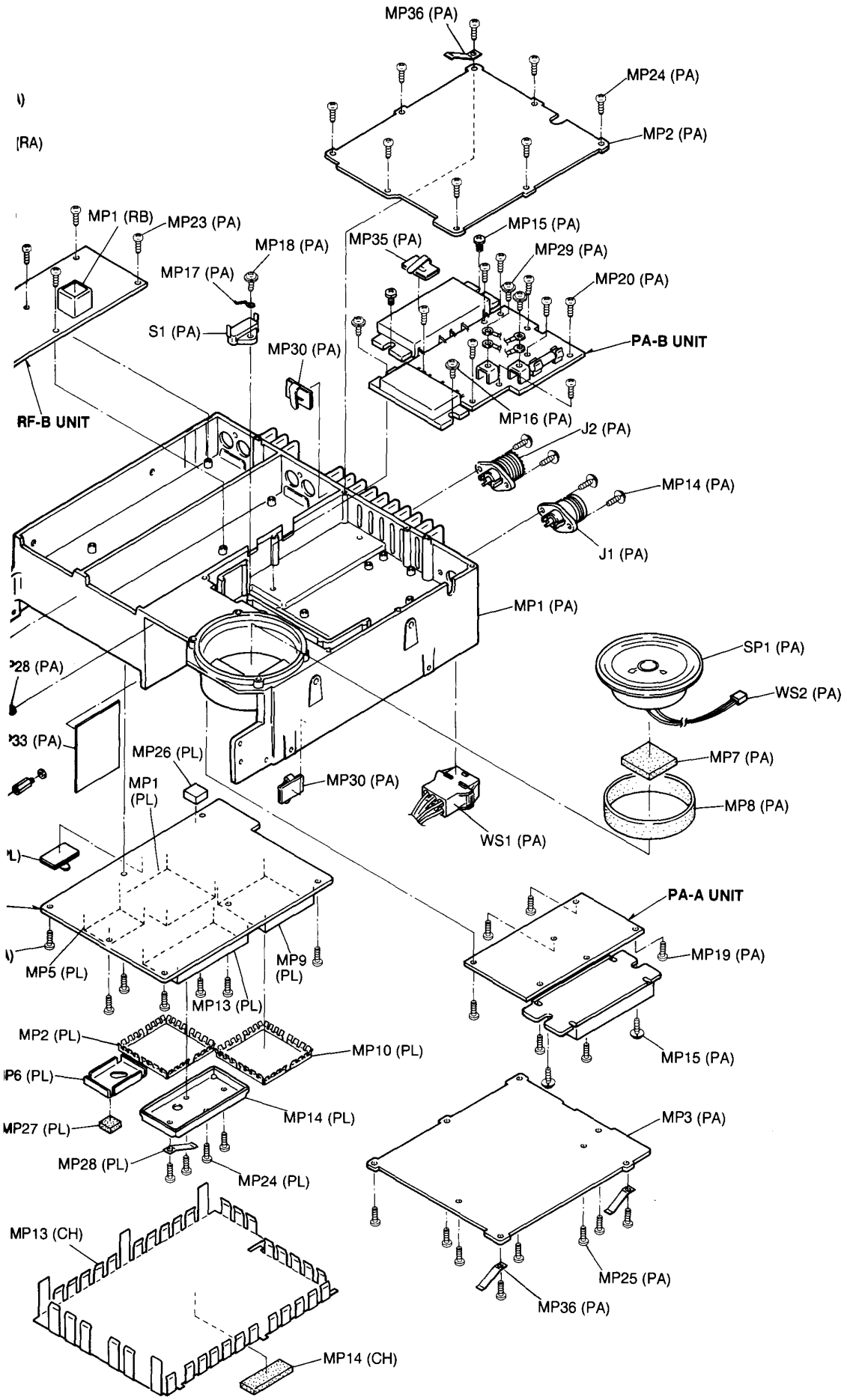

(D): DISP UNIT (PL): PLL UNIT (M): MAIN UNIT (RA): RF-A UNIT (RB): RF-B UNIT (PA): PA PARTS (CH): CHASSIS PARTS

Downloaded from www.Manualslib.com manuals search engine

[PLL UNIT]

REF. NO.	ORDER NO.	DESCRIPTION	QTY.
MP1	8510008300	963 DDS shield case	1
MP2	8510008310	963 DDS shield cover	1
MP4	8510005330	Coil case	1
MP5	8510000881	194 VCO case -1	1
MP6	8510000200	194 VCO case cover (B)	1
MP9	8510008300	963 DDS shield case	1
MP10	8510008310	963 DDS shield cover	1
MP12	8510005330	Coil case	1
MP13	8510004010	504 VCO case	1
MP14	8510003120	323 VCO case cover	1
MP24	8810000210	Screw PH BT M3 x 4	4
MP25	8950002460	Wire hook S-10	1
MP26	8930040990	Thermal sheet (E)	1
MP27	8930001450	Sponge (P)	1
MP28	8930001170	Ground spring (A)	1

[MAIN UNIT]

REF. NO.	ORDER NO.	DESCRIPTION	QTY.
MP1	8510002200	VCO case	1
MP2	8410001500	Main heatsink	1
MP3	8930020860	IC-holder	1
MP4	8930027940	1126 TR-B clip	1
MP5	8950002460	Wire hook S-10	1
MP6	8510010070	1691 DDS case	1
MP7	8510003510	406 shield case cover	1
MP8	8510005330	Coil case	1
MP9	8510010150	D/A case	1
MP10	8950004610	Wire hook S-5	1

[RF-A UNIT]

REF. NO.	ORDER NO.	DESCRIPTION	QTY.
MP1	8410000660	Heatsink (A)	2
MP2	8950002460	Wire hook S-10	1
MP3	8510002280	VCO shield plate (A)	1
MP4	8930001180	Ground lug	1

[RF-B UNIT]

REF. NO.	ORDER NO.	DESCRIPTION	QTY.
MP1	8510000020	194 shield case	1
MP2	8930012060	Prescaler case	1
MP3	8510002280	VCO shield plate (A)	1
MP4	8510008420	1327 DBM case	1
MP5	8930001180	Ground lug	1
MP6	8930014140	Ground spring (D)	1

[PA PARTS]

REF. NO.	ORDER NO.	DESCRIPTION	QTY.
S1	6910000050	Thermal switch OHD-3 50M	1
MF1	2710000480	Fan MF40C-12H004	1
J1	6510004910	Connector NR-DSE-01	1
J2	6510004880	Connector MR-DSE-01	1
WS1	8600035180	Cable P01*03PA (A) [USA], [AUS]	1
	8600035190	Cable P01*03PA (B) [EUR], [SWE]	1
WS2	8600035210	Cable P02PA	1
MP1	8010015272	1424 heatsink -2	1

[PA PARTS]

REF. NO.	ORDER NO.	DESCRIPTION	QTY.
MP2	8510008641	PA-B cover -1	1
MP3	8510008650	PA-A cover	1
MP7	8930032290	Sponge (DQ)	1
MP8	8930007831	401 sponge (C) -1	1
MP10	8930040630	Film tape	2
MP14	8810006070	Setscrew A M3 x 6 NI	4
MP15	8810003860	Setscrew A M4 x 8	4
MP16	8810007230	Setscrew H M3 x 8	2
MP17	6910008240	Clip 59TN4772	1
MP18	8810003170	Setscrew A M3 x 8	1
MP19	8810008200	Screw PH BT M2.6 x 6 NI-ZU	6
MP20	8810008200	Screw PH BT M2.6 x 6 NI-ZU	8
MP21	8810008630	Screw PH BT M3 x 6 NI-ZU	7
MP22	8810008630	Screw PH BT M3 x 6 NI-ZU	8
MP23	8810008630	Screw PH BT M3 x 6 NI-ZU	7
MP24	8810008630	Screw PH BT M3 x 6 NI-ZU	8
MP25	8810008630	Screw PH BT M3 x 6 NI-ZU	8
MP26	8930000130	Spacer (I)	2
MP27	8810003200	Setscrew A M3 x 14	2
MP28	8850000420	Spring washer M3 NI	2
MP29	8810003170	Setscrew A M3 x 8	2
MP30	8950002460	Wire hook S-10	2
MP31	8930020990	Sponge (CN)	1
MP33	8510009090	1424 shield	1
MP35	8950002460	Wire hook S-10	1
MP36	8930001170	Ground spring (A) (EUR, SWE only)	3
SP1	2510000040	Speaker C065K12I0810	1

[CHASSIS PARTS]

REF. NO.	ORDER NO.	DESCRIPTION	QTY.
MP1	8010015291	1424 chassis -1	1
MP2	8830000210	Nut M5 NI BS	1
MP3	8830000360	Wing nut M5 NI	1
MP4	8850000150	Flat washer M5 NI BS	2
MP5	8850000440	Spring washer M5 NI	1
MP6	8810008630	Screw PH BT M3 x 6 NI-ZU	13
MP7	8810002170	Screw FH BT M3 x 6	2
MP8	8810006070	Setscrew A M3 x 6 NI	2
MP10	8950002460	Wire hook S-10	3
MP11	8930040600	Insulation plate EQ	1
MP13	8510010660	1886 PLL cover	1
MP14	8930001890	Sponge (D)	1

[UNPACKING]

REF. NO.	ORDER NO.	DESCRIPTION	QTY.
F1	5210000080	Fuse FGB 20 A	2
F2	5210000180	Fuse FGMB 125 V 5 A	1
J1	6450001750	Connector TCP0587-71-5201	1
W1	Optional product	DC power cable OPC-657	1
MC1	Optional product	Microphone HM-12	1
MP1	8810001650	Screw PH FT M3 x 6	4
MP2	8810008430	Screw OH ST M4 x 10 CR	2

Screw abbreviations
BT: Self-tapping
PH: Pan head FH: Flat head
OH: Oval countersunk head
NI: Nickel NI-ZU: Nickel-zinc
BS: Brass ZK: Black

Downloaded from www.Manualslib.com manuals search engine

SECTION 8 SEMI-CONDUCTOR INFORMATION

• TRANSISTORS AND FET'S

2SA1586 GR (Symbol: SG)	**2SB1123T** (Symbol: BF)	**2SC2053**	**2SC2407**	**2SC2538**
2SC2714 Y (Symbol: QY)	**2SC3356 R24** (Symbol: R24)	**2SC3357** (Symbol: RK)	**2SC3650** (Symbol: CF)	**2SC4081 R** (Symbol: BR)
2SC4116 GR (Symbol: LG)	**2SC4213 B** (Symbol: AB)	**2SC4215 O** (Symbol: QO)	**2SC4226 R25** (Symbol: R25)	**2SJ144 GR** (Symbol: VG)
2SK1577 2 (Symbol: P2)	**2SK2171 4** (Symbol: KM)	**2SK302 Y** (Symbol: TY)	**2SK508 K52** (Symbol: K52)	**2SK882 GR** (Symbol: TG)
3SK131 LA (Symbol: V12)	**3SK228XR** (Symbol: XR)	**DTA114EU** (Symbol: 14)	**DTA114TU** (Symbol: 94)	**DTC114EU** (Symbol: 24)
DTC144EU (Symbol: 26)	**FMW1** (Symbol: W1)	**RN1204**	**RN2425** (Symbol: RE)	**RN2427** (Symbol: RG)
UMD3 (Symbol: D3)				

Downloaded from www.Manualslib.com manuals search engine

• DIODES

1SS272 (Symbol: A1) 	**1SV237** (Symbol: BB) 	**1SV239** (Symbol: TC) 	**DAN202U** (Symbol: N) 	**DAP202U** (Symbol: P)
DWA010 (Symbol: W8) 	**HSM88AS** (Symbol: C1) 	**MA862** (Symbol: M1I) 	**RD20M B2** (Symbol: 202) 	**RD5.1M B2** (Symbol: 512)
RD6.2M B2 (Symbol: 622) 	**RD9.1M B3** (Symbol: 913) 			

Downloaded from www.Manualslib.com manuals search engine

SECTION 9 BOARD LAYOUTS

9-1 FRONT UNIT

● SW-A BOARD

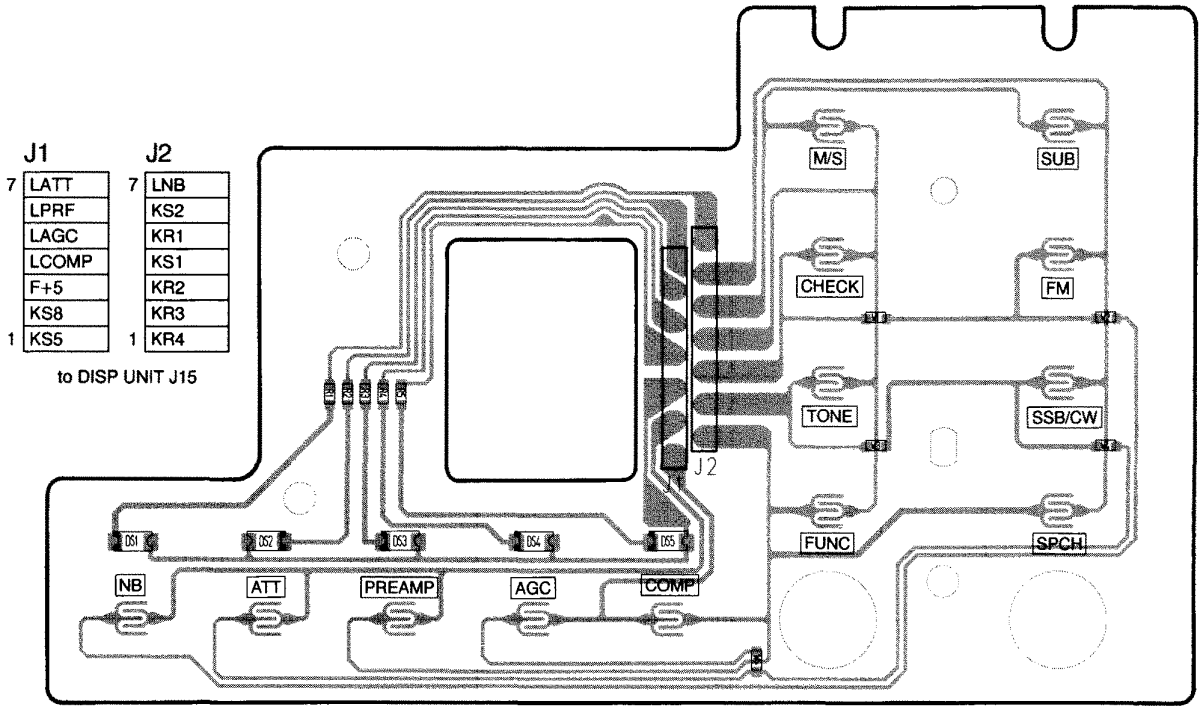

● SW-B BOARD

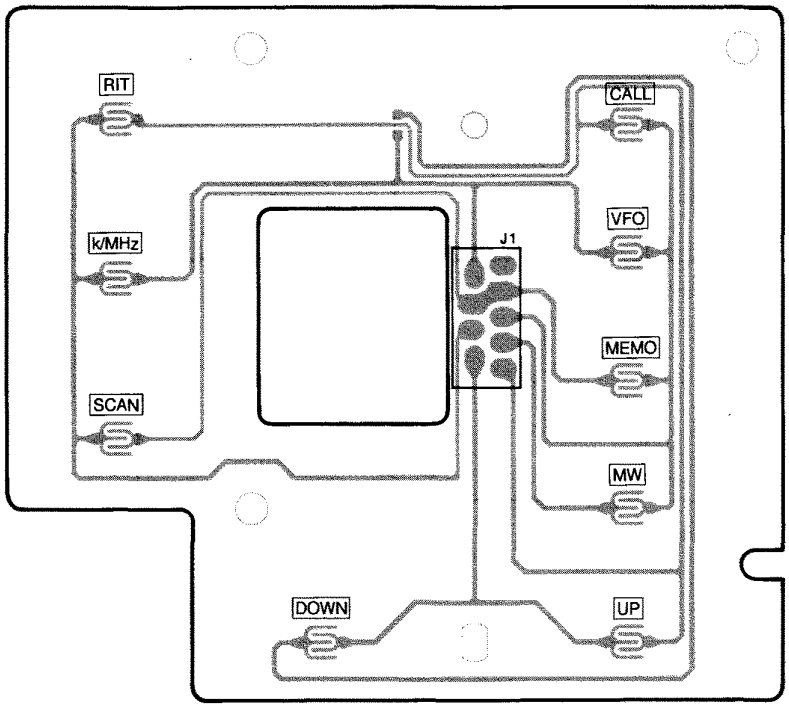

J1

	NC	1
2 KR2	KR3	
KR3	KS4	
KS3	KR4	
8 KS5	KR1	9

to DISP UNIT J16

Downloaded from www.Manualslib.com manuals search engine

• DISP UNIT

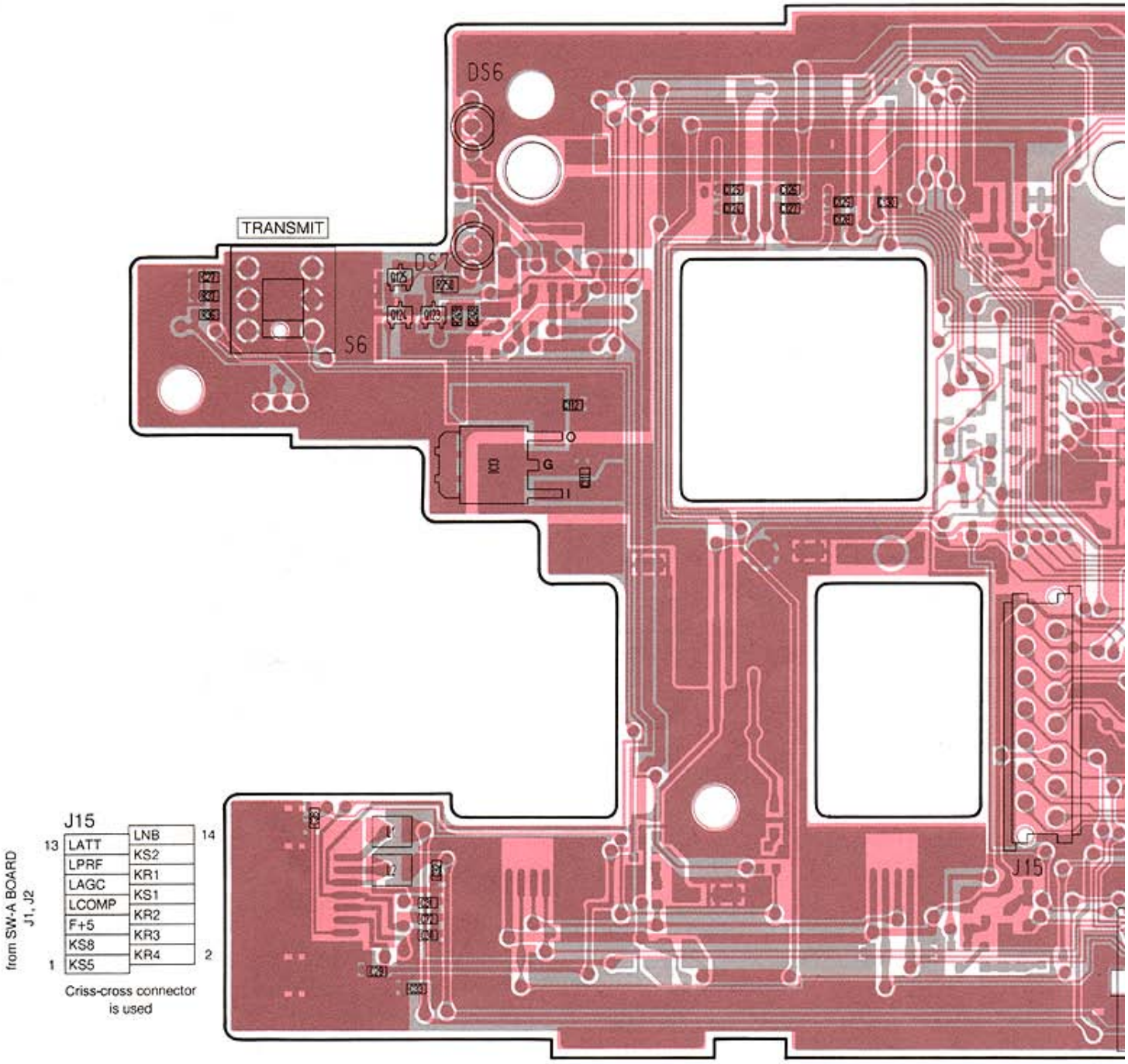

• JACK BOARD

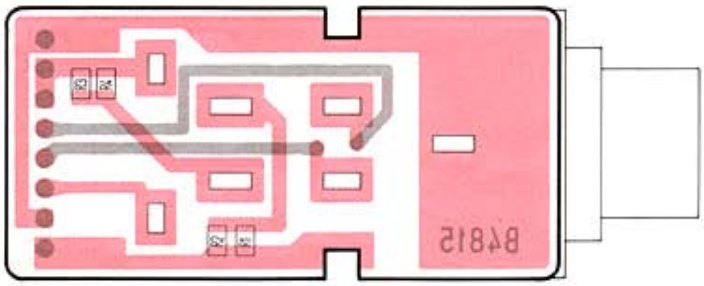

• VR BOARD

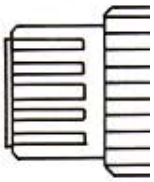

Downloaded from www.Manualslib.com manuals search engine

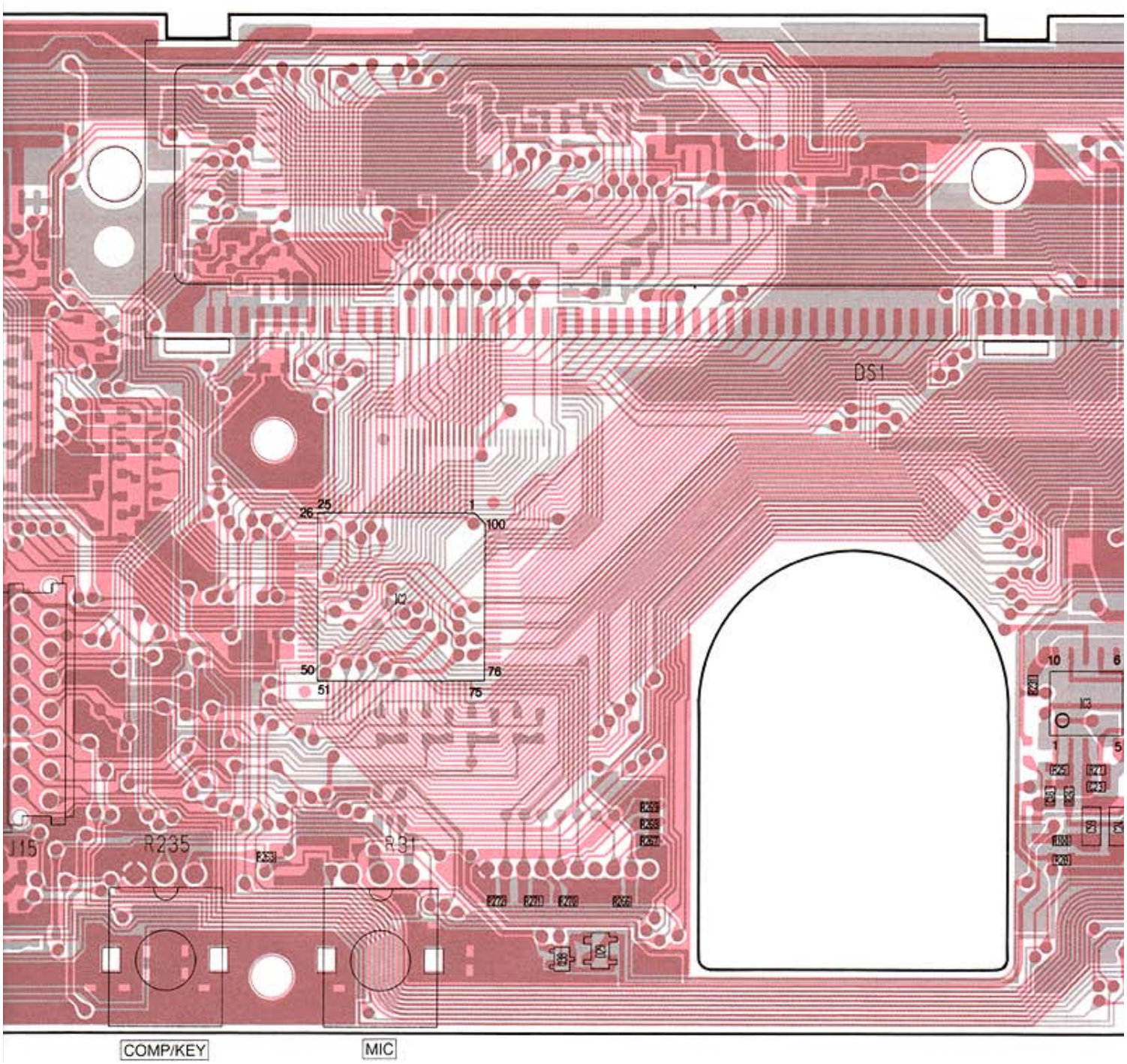

• VR BOARD (MAIN)

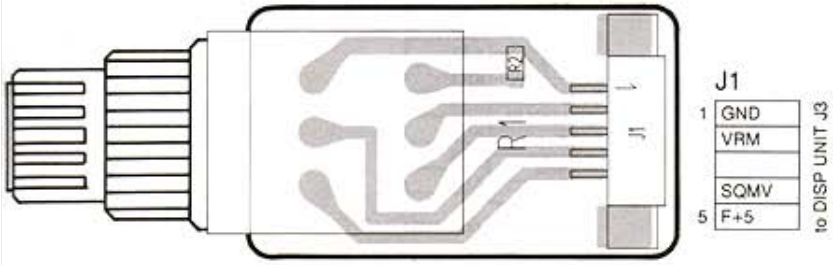

• VR BOARD (SUB)

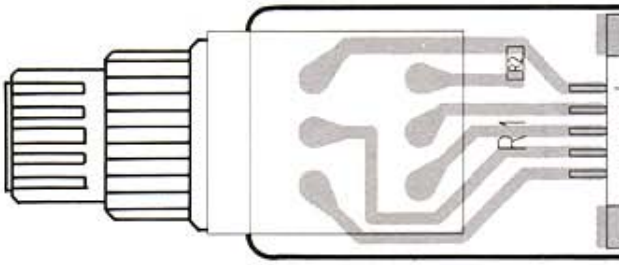

Downloaded from www.Manualslib.com manuals search engine

The combination of this page and the next page show the unit layout in the same configuration as the actual P. C. Board.

RF PWR

● RIT BOARD

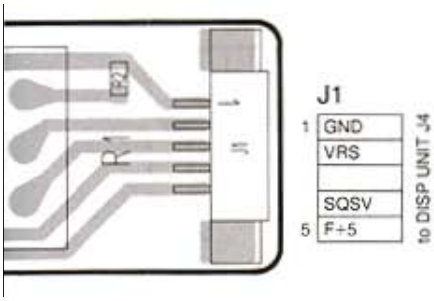

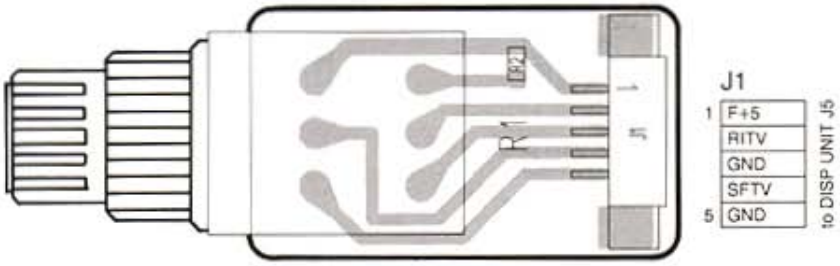

Downloaded from www.Manualslib.com manuals search engine

• DISP UNIT

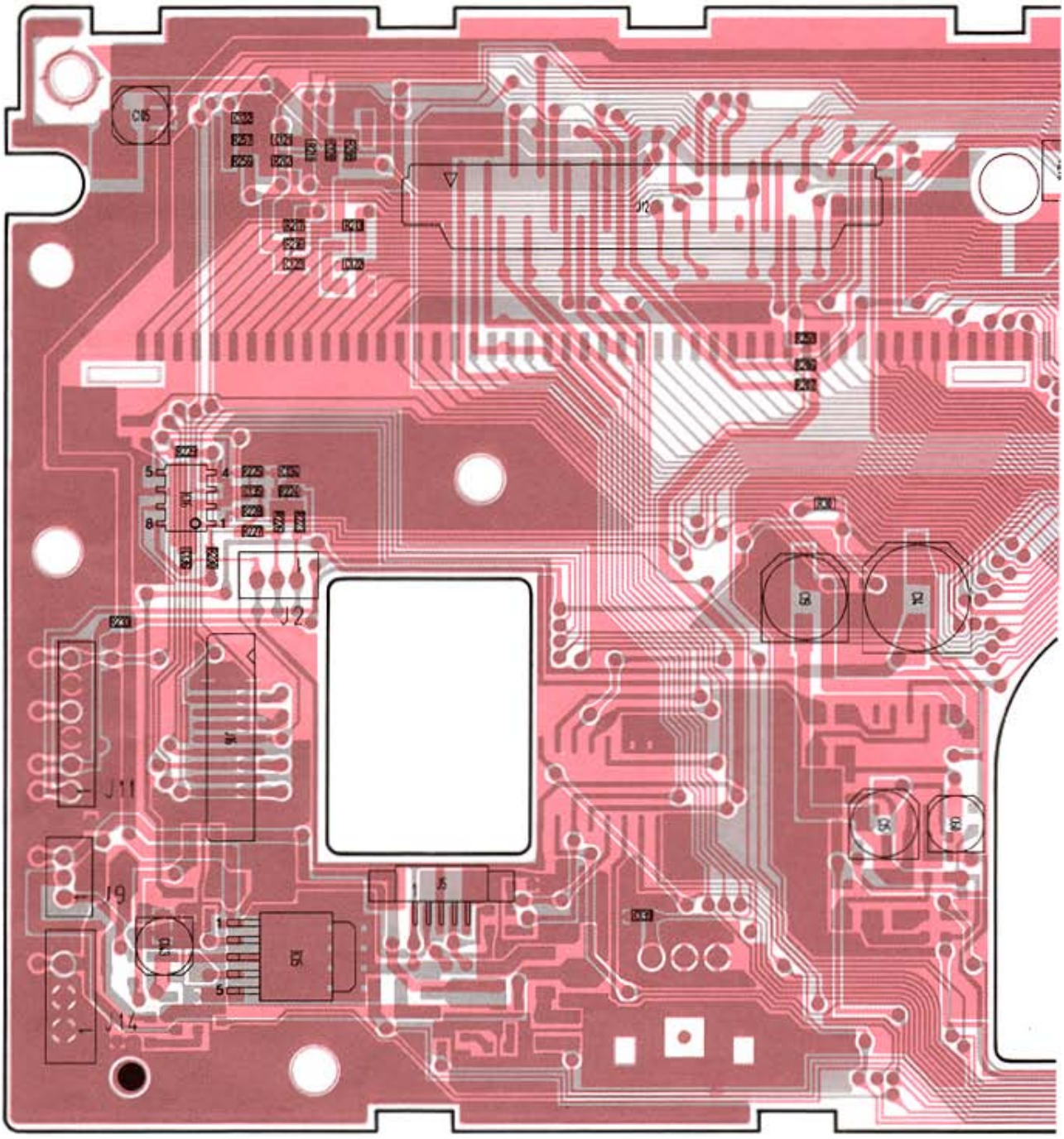
C15
J12
J2
J11
J9
J14
J5
IC1
IC2
IC3
IC4
IC5
IC6
IC7
IC8
IC9
IC10
IC11
IC12
IC13
IC14
IC15
IC16
IC17
IC18
IC19
IC20
IC21
IC22
IC23
IC24
IC25
IC26
IC27
IC28
IC29
IC30
IC31
IC32
IC33
IC34
IC35
IC36
IC37
IC38
IC39
IC40

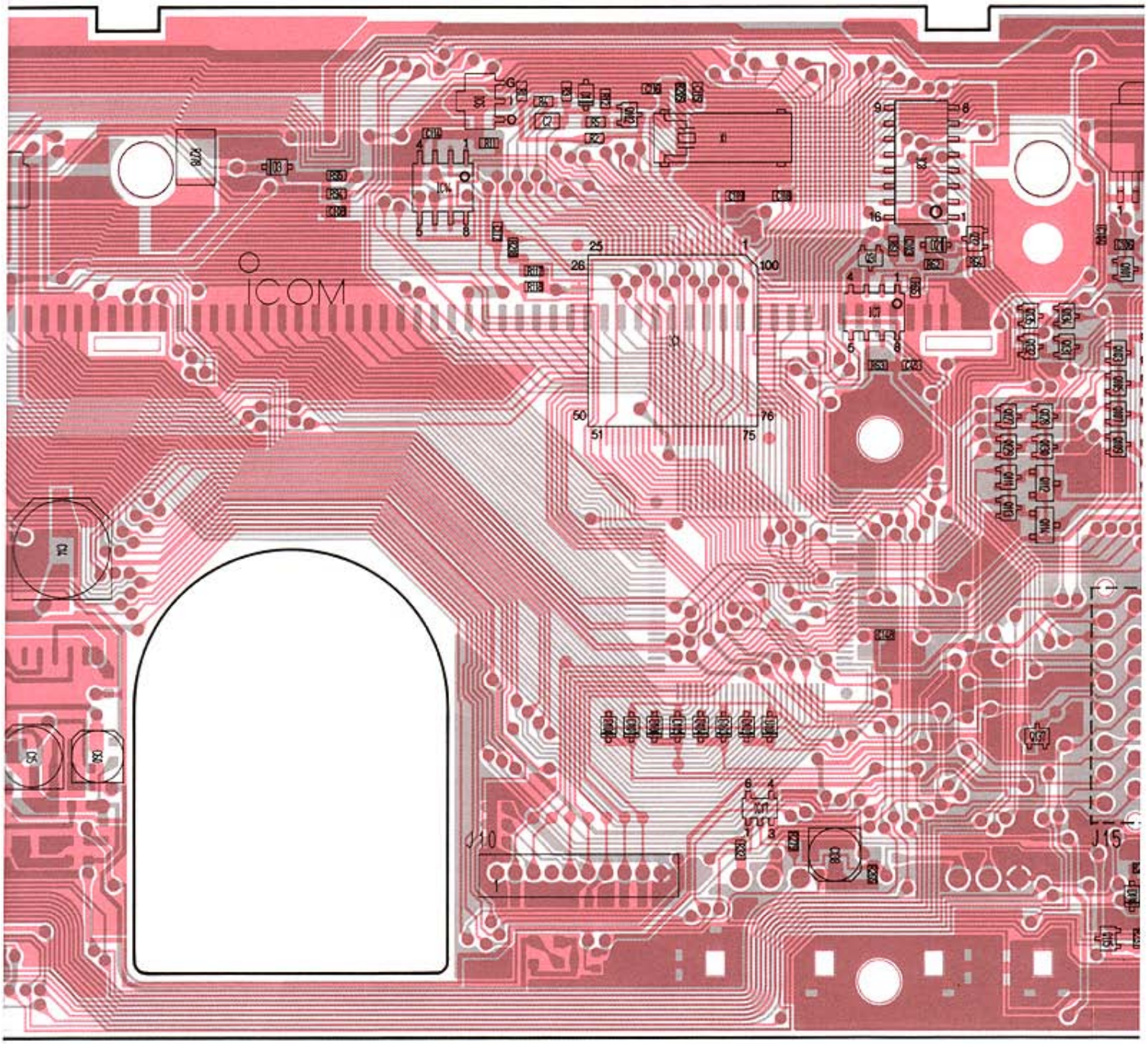

J10

	LCTA	LCTB		STPA	STPB	SCK2	SO2	STPD	GND

1 10

to PLL UNIT J1

J15

13	LATT	LNB	14
	LPRF	KS2	
	LAGC	KR1	
	LCOMP	KS1	
	F+5	KR2	
	KS8	KR3	
1	KS5	KR4	2

Criss-cross connector is used

from SW-A BOARD J1, J2

J13

J4

GND	VRS	SQSV	F+5

1 5

from VR BOARD (SUB) J1

Downloaded from www.Manualslib.com manuals search engine

J7

ATTB	MR9B	SR9B	MT9B	GND	M+5		13.8		ATTA	MR9A	SR9A	MT9A	GND	M+5		13.8

17 1

to RF-A UNIT J4
RF-B UNIT J8

J1

MSPO	PHG

1 3

from JACK
BOARD J2

METER

W2 W1

J1

P 1

from DC
POWER SOCKET

POWER

J6

8	MICE
	MIC
	+9
	MSPO
	MIUD
	SGLM
	PTT
1	GND

from MIC

J16

● JACK BOARD

J13

TXSW	GND	M+5	+9	13.8	13.8	13.8

1 7

to MAIN UNIT J3

J3

GND	VRM		SQMV	F+5

1 5

from VR
BOARD (MAIN)
J1

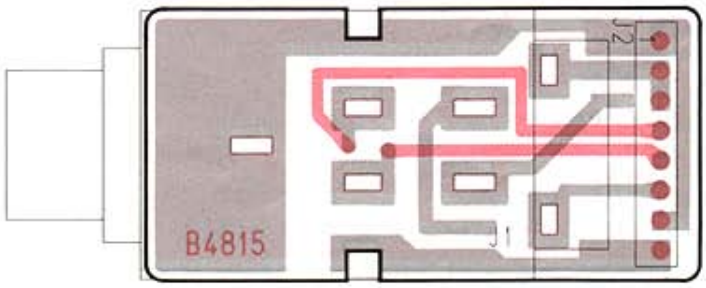

J2

1	PHG
	MSPO
	MSPO
	SSPJ
	PHCO
	MSPJ
	PHG
8	SSPO

to DISP
UNIT J1
MAIN
UNIT J22

Downloaded from www.Manualslib.com manuals search engine

9-2 MAIN UNIT

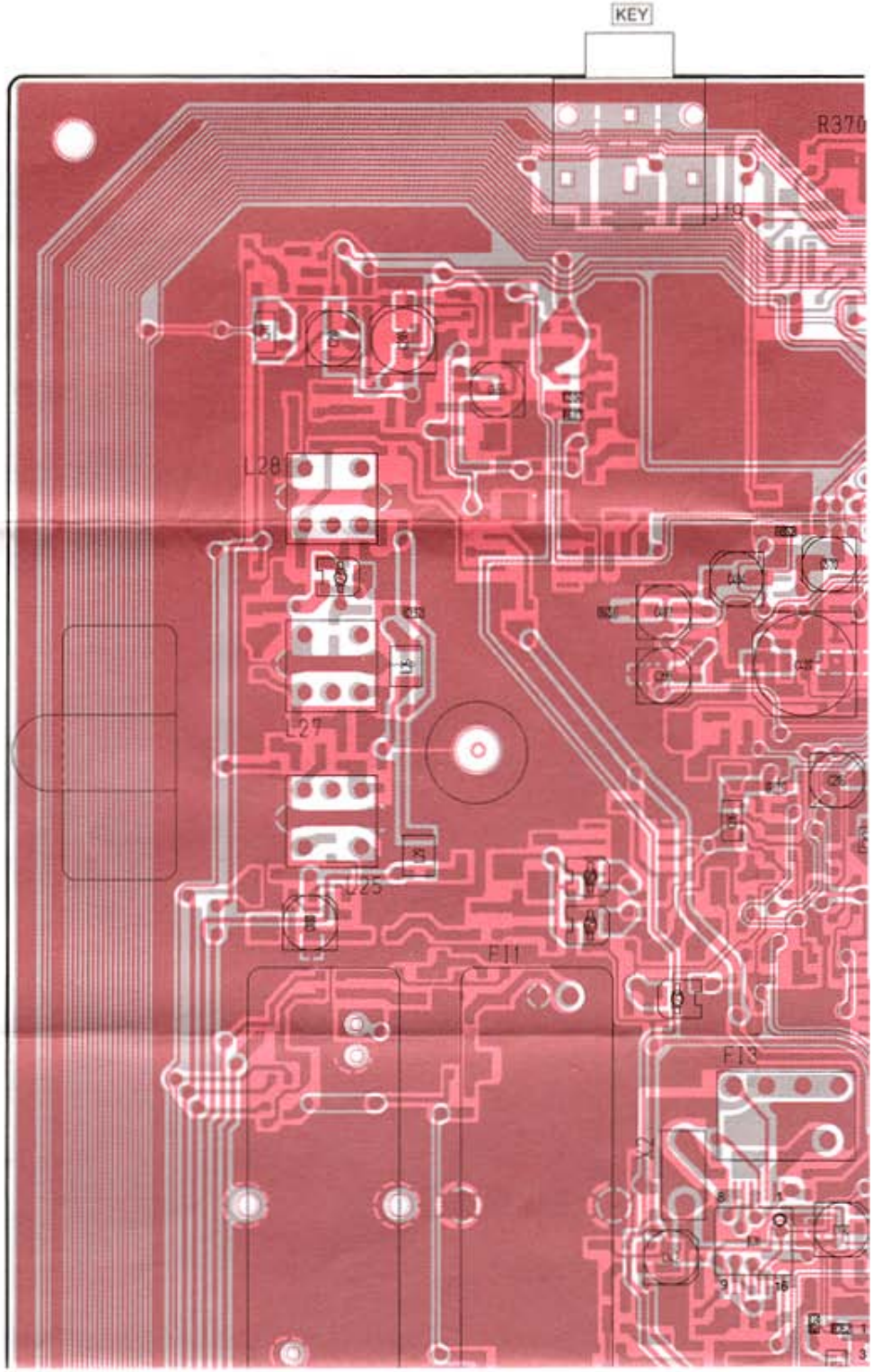

J15

from DISP UNIT J11

BEEP	1
BEPE	3

J25

Downloaded from www.Manualslib.com manuals search engine

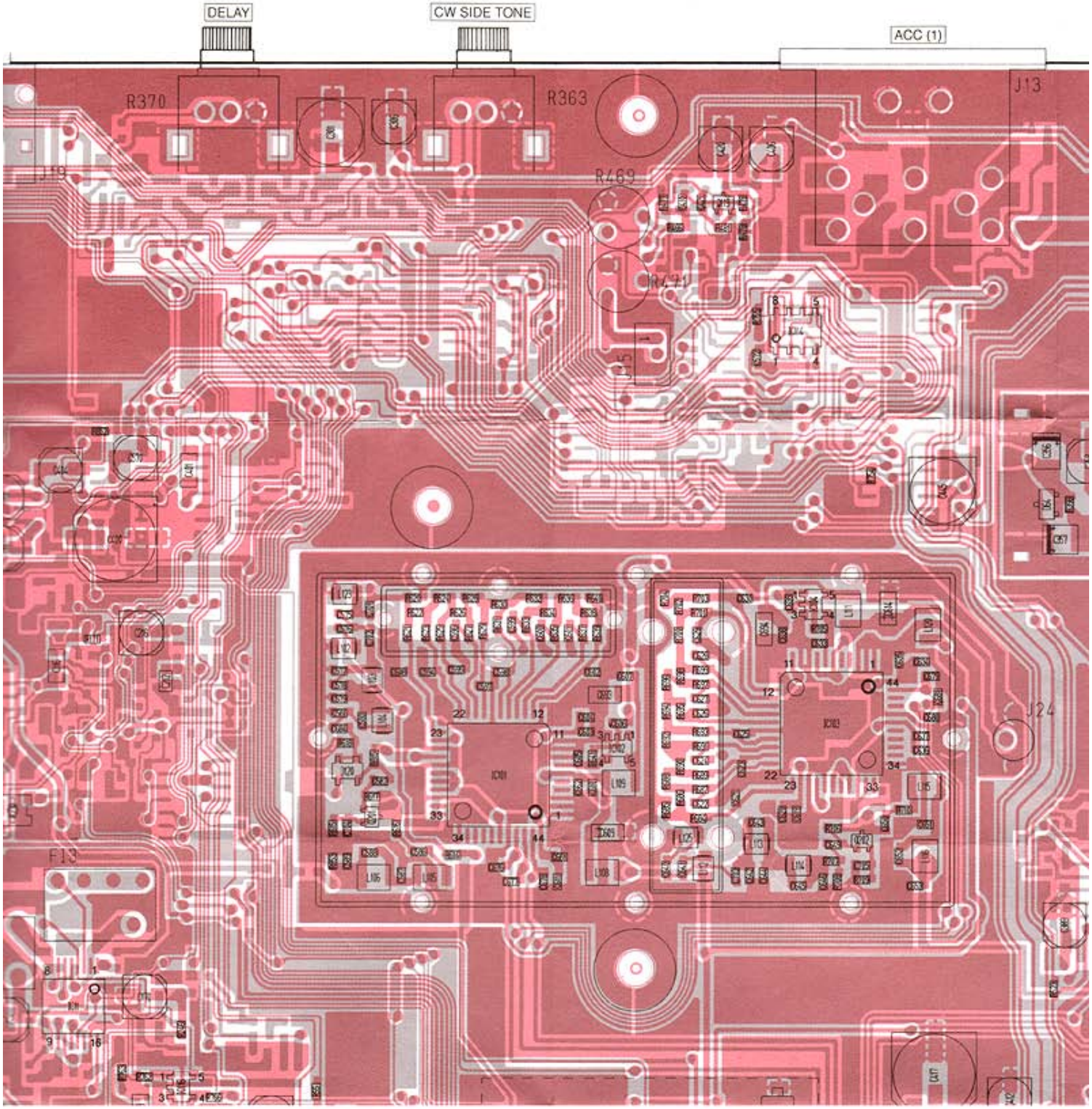

Downloaded from www.Manualslib.com manuals search engine

The combination of this page and the next page show the unit layout in the same configuration as the actual P. C. Board.

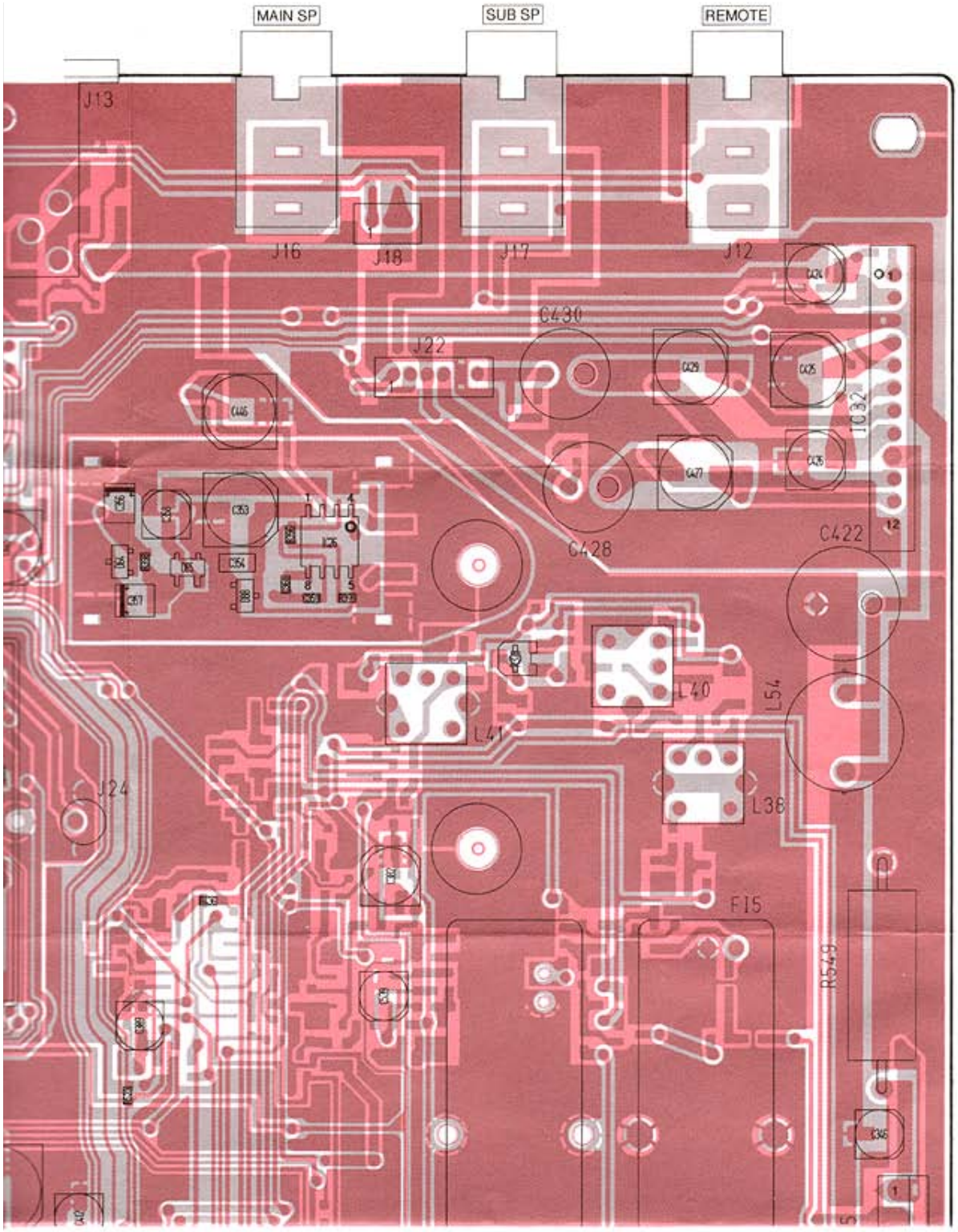

J18

INSP		E
1		3

to SP1

from Jack BOARD
J2

J22

MSPJ	PHCO	SSPJ	MSPO	PHG	SSPO
1					6

Downloaded from www.Manualslib.com manuals search engine

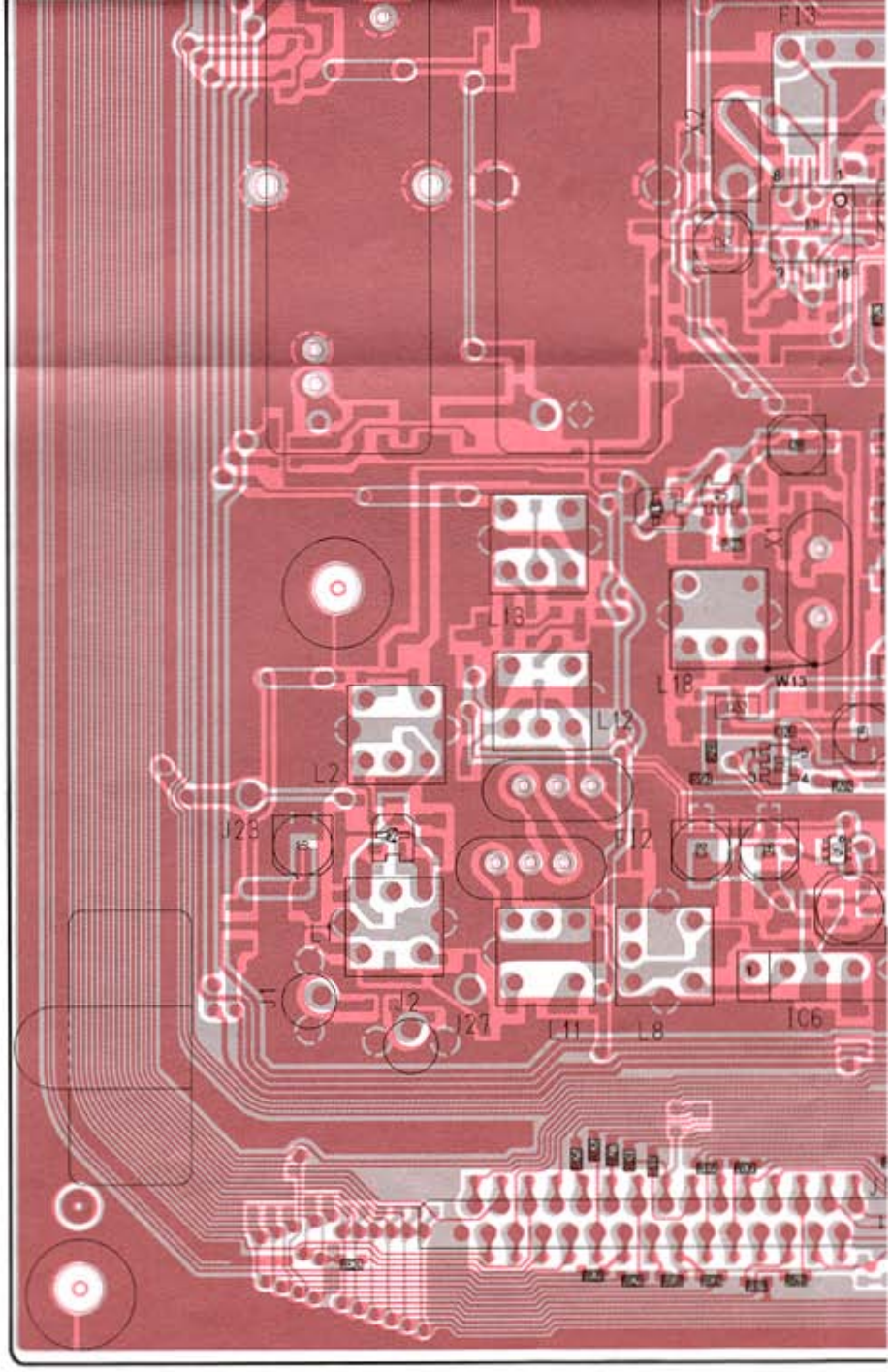

J25

to optional UNIT UT-102

7	GND	SPCM	8
	M+5	SPCE	
	VBUSY	SCK1	
1	SO1	STSP	2

J7

MICE			MOD
4			1

from DISP UNIT J11

J20

to optional UNIT UT-84

11	TSQLS	M+5	12
	SO1	UTTON	
	SCK1	DETS	
	STTM	STTS	
	TSQLM	GND	
1	DETM	TONE	2

J11

29															1
	VRS	MIOF	SEND	ALCI	UTTON	TSQLM	EDSH	ADSSM	ADSCM	ADSNO	ADRF	VBUSY	AFMM	SCK1	XSTB
GND	VRM	POCO	MIUD	CI-V	TSQLS	EKEY	EDOT	ADMSM	ADMCM	ADMNO		AFMS	XPOE	SO1	
30															2

from DISP UNIT J12

Downloaded from www.Manualslib.com manuals search engine

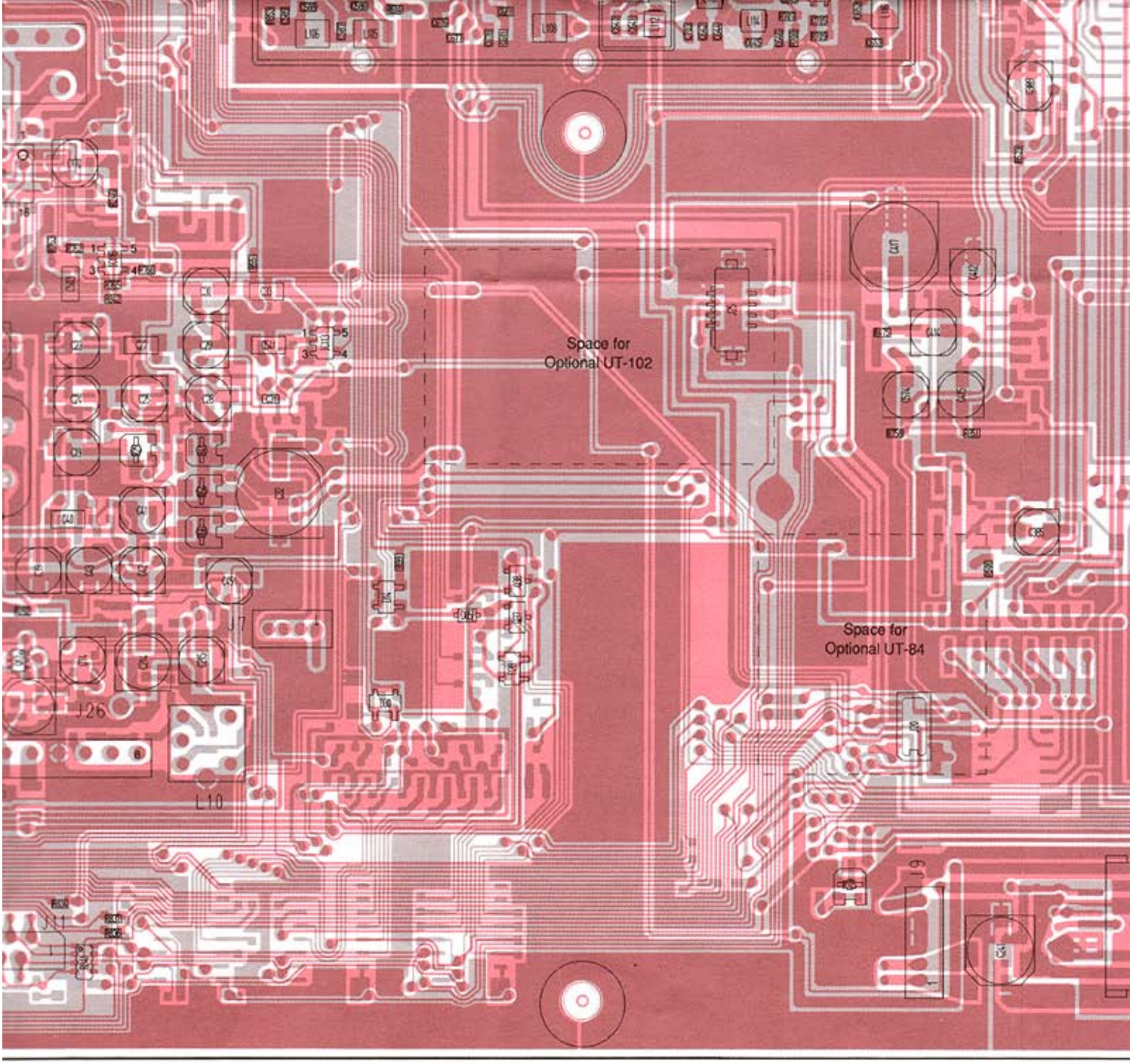

Downloaded from www.Manualslib.com manuals search engine

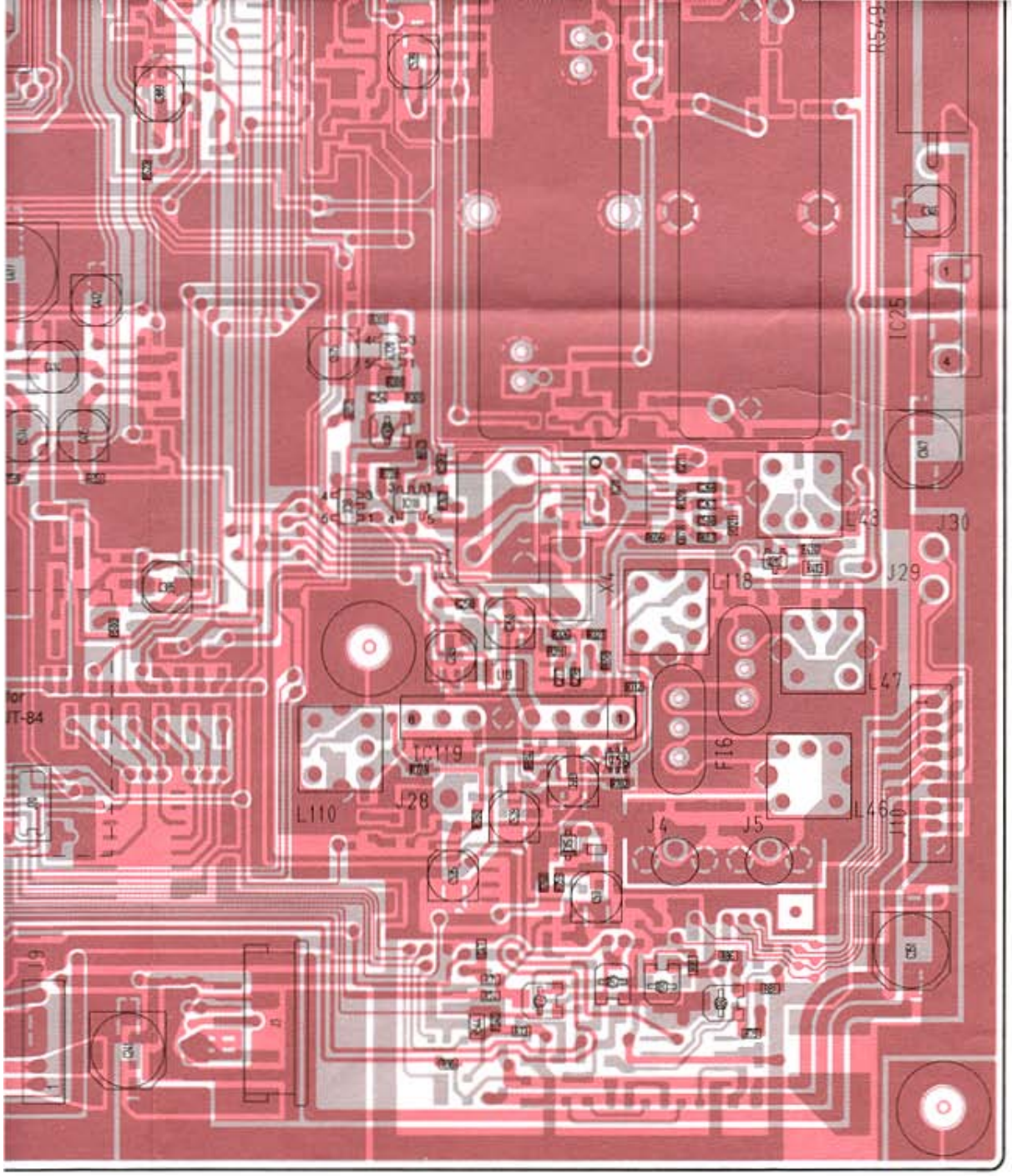

J10

1	AIC2	to PA-A UNIT J1 PA-B UNIT J1
	IC1	
	BIC2	
	FORA	
	FORB	
	GNDB	
	PAT9	
	PBT9	
9	GNDA	

J3

7	TXSW	from DISP UNIT J13
	GND	
	M+5	
	+9	
	13.8	
	13.8	
1	13.8	

J9

6	-5	from PLL UNIT J2
	GND	
	GND	
	GND	
	+9	
	13.8	

Downloaded from www.Manualslib.com manuals search engine

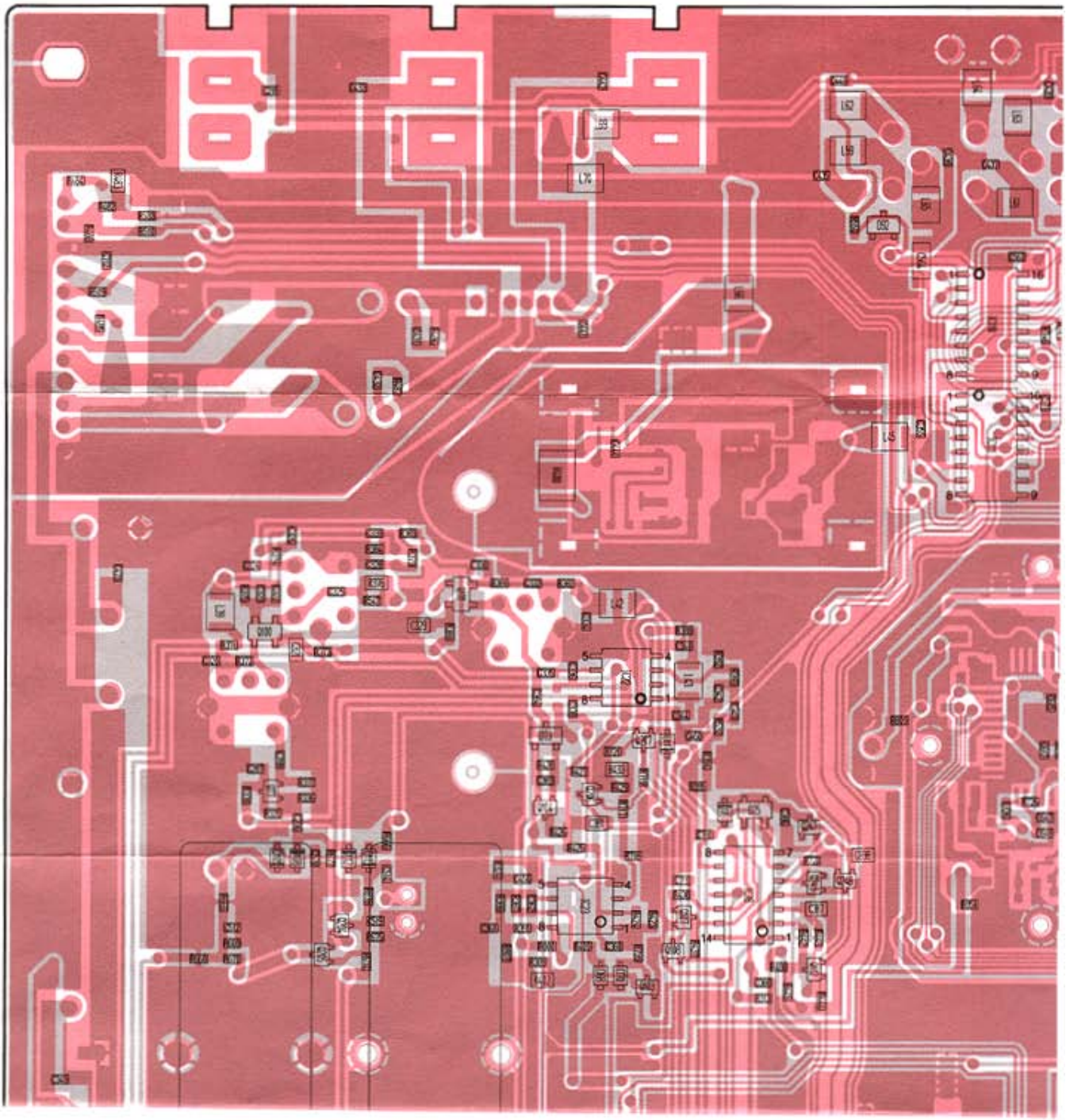

Downloaded from www.Manualslib.com manuals search engine

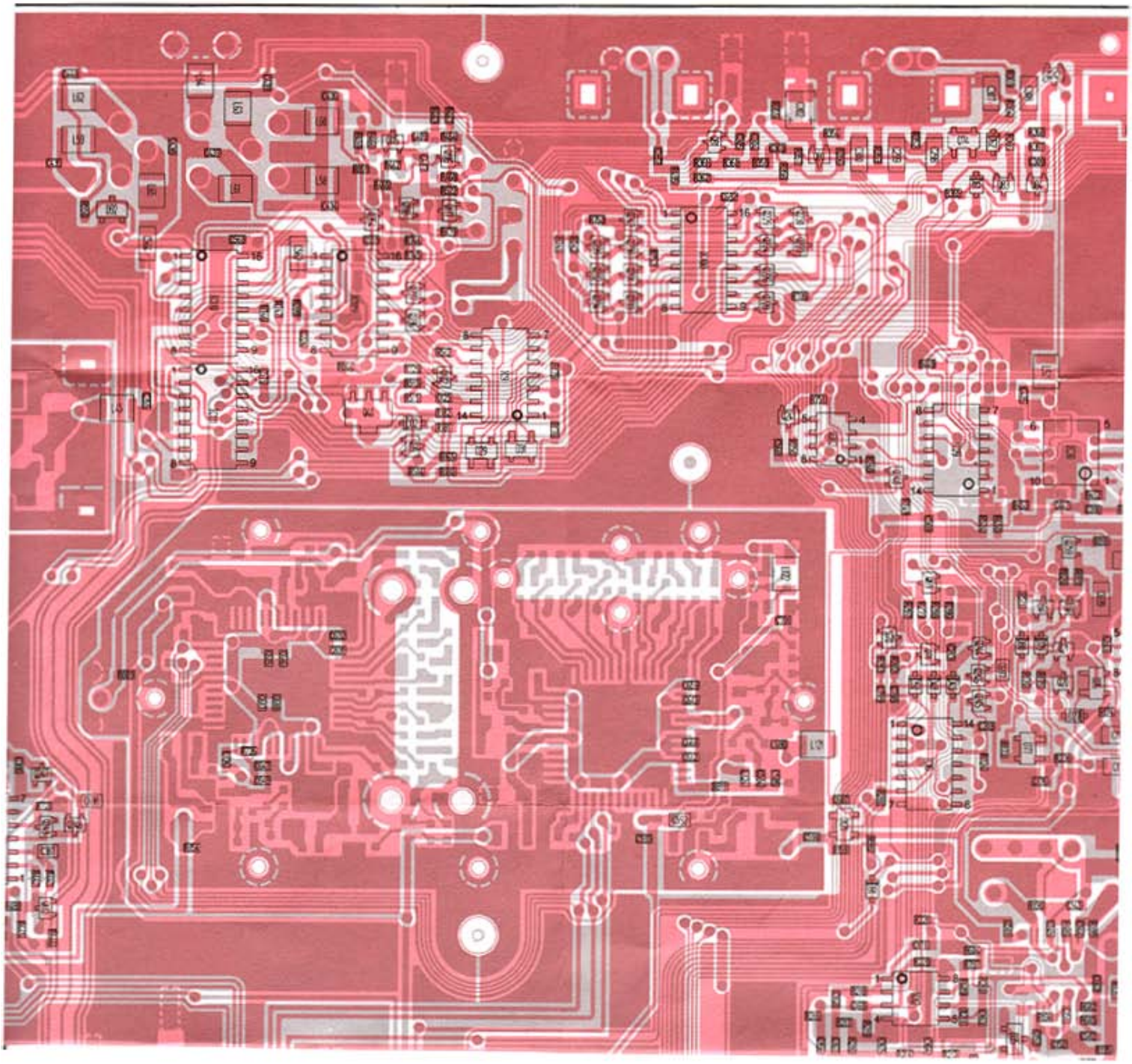

Downloaded from www.Manualslib.com manuals search engine

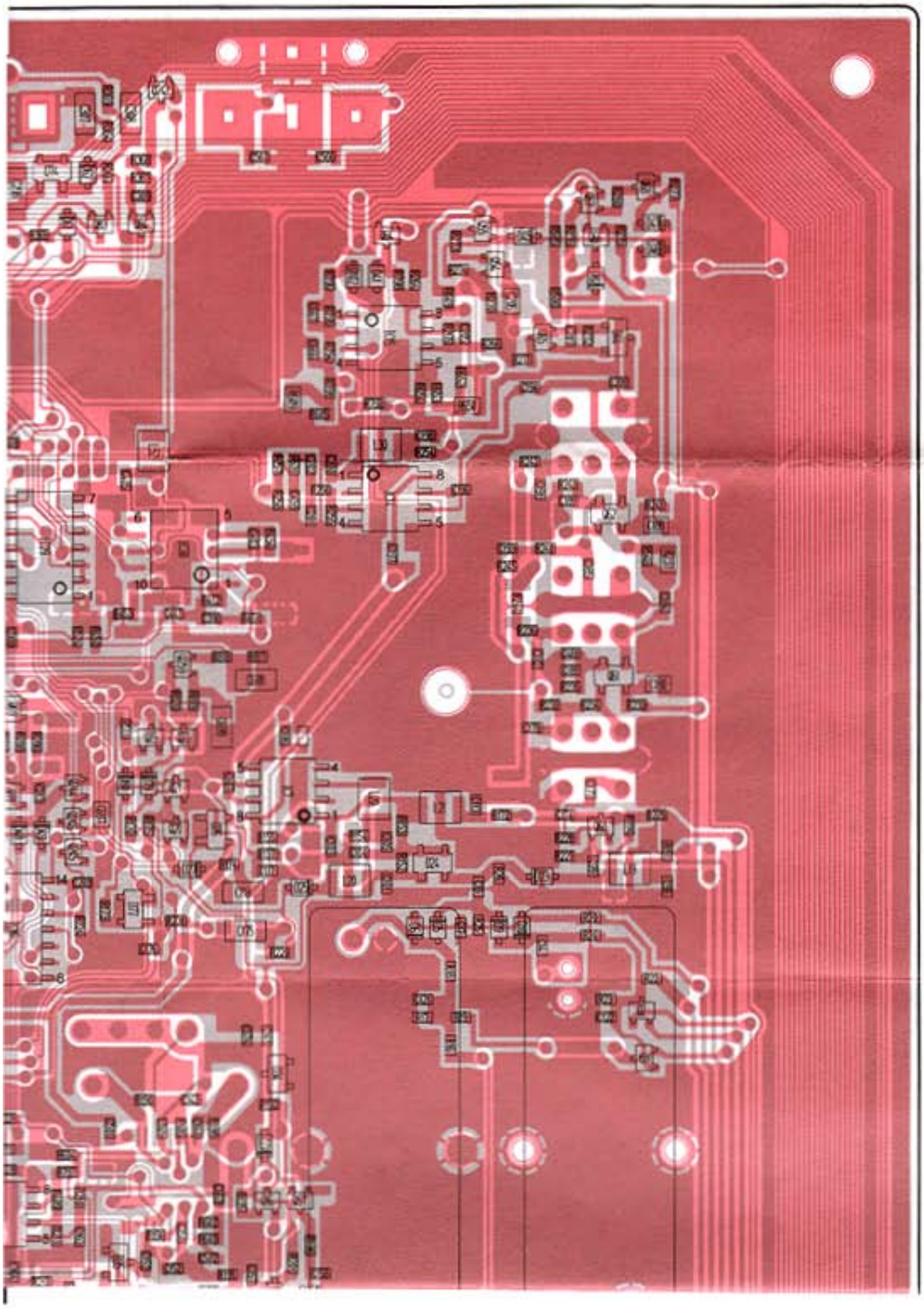

Downloaded from www.Manualslib.com manuals search engine

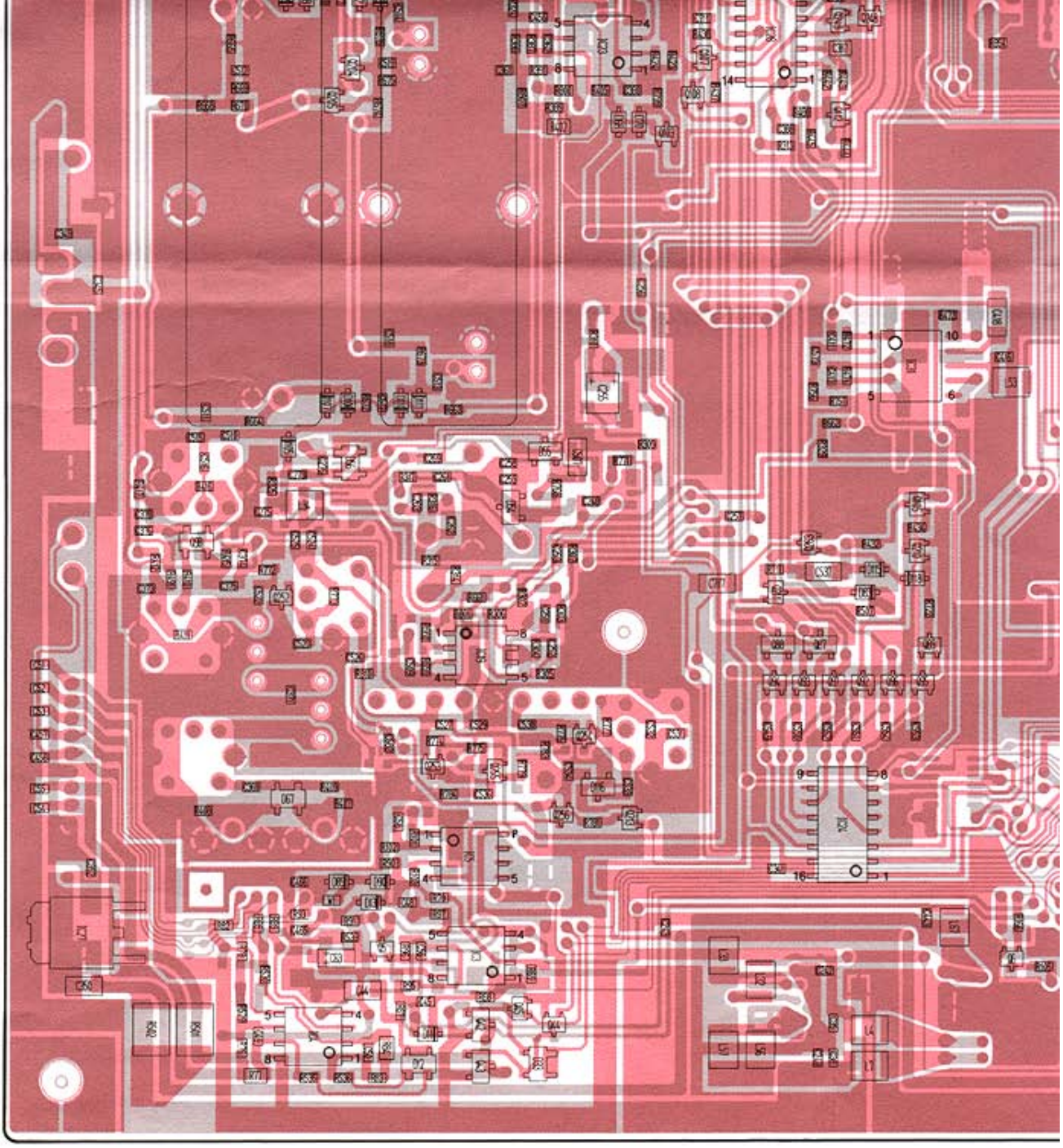

Downloaded from www.Manualslib.com manuals search engine

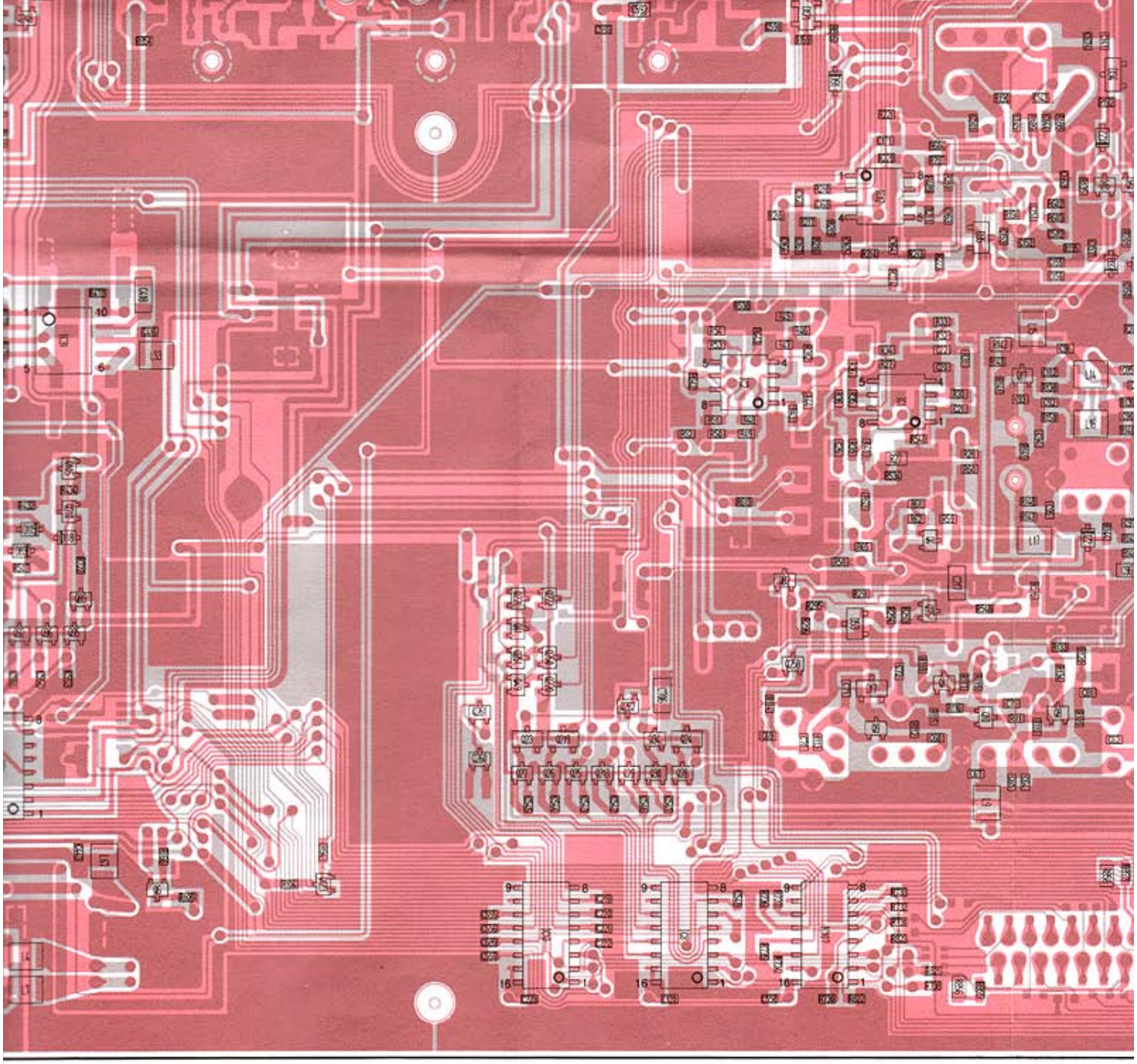

Downloaded from www.Manualslib.com manuals search engine

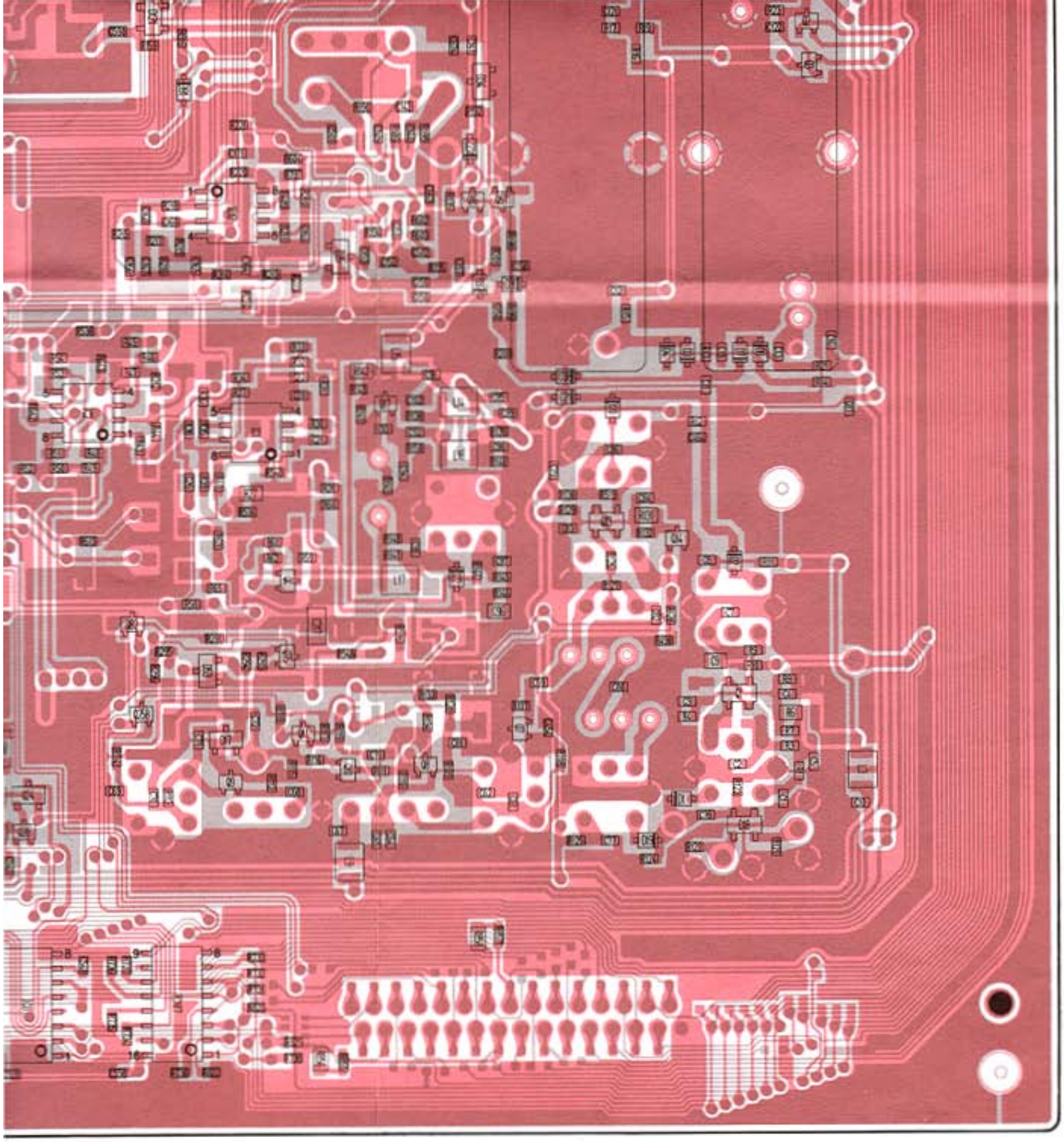

Downloaded from www.Manualslib.com manuals search engine

9-3 PLL UNIT

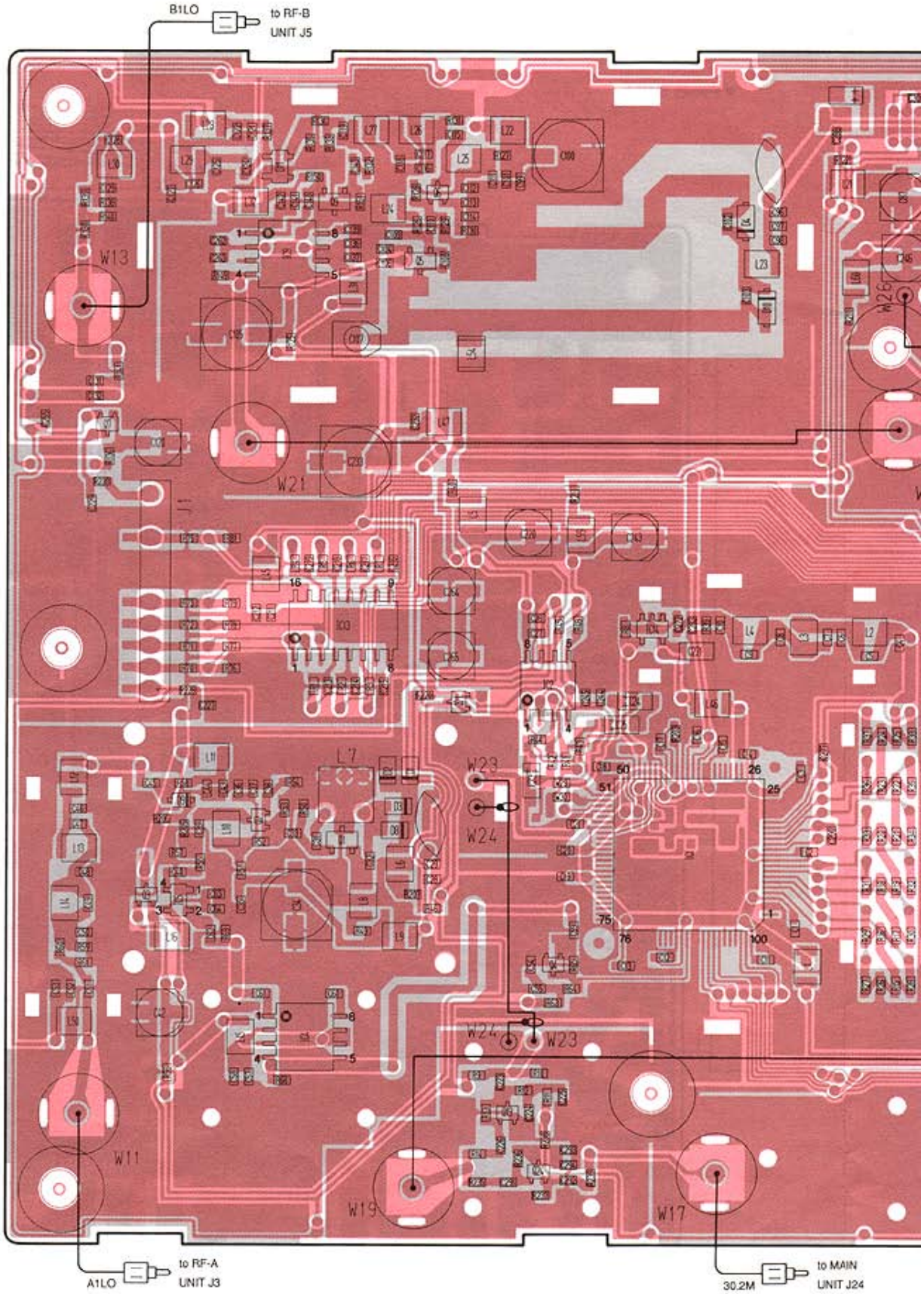

J1

to DISP UNIT J10

10	LCTB
	GND
	STPB
	STPA
	SCK2
	STPD
	SO2
1	LCTA

Downloaded from www.Manualslib.com manuals search engine

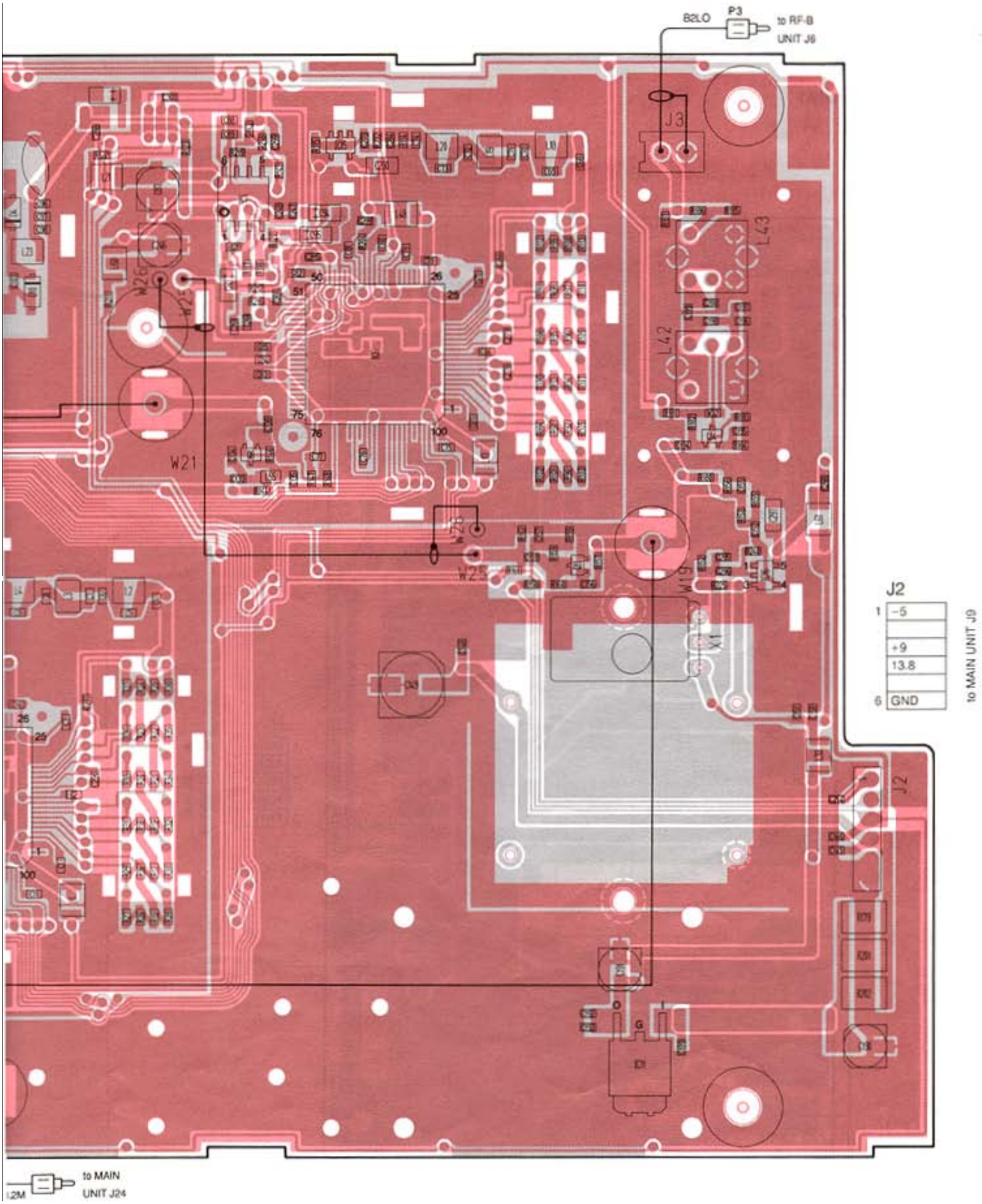

Downloaded from www.Manualslib.com manuals search engine

9-4 PA-A AND PA-B UNITS

● PA-A UNIT

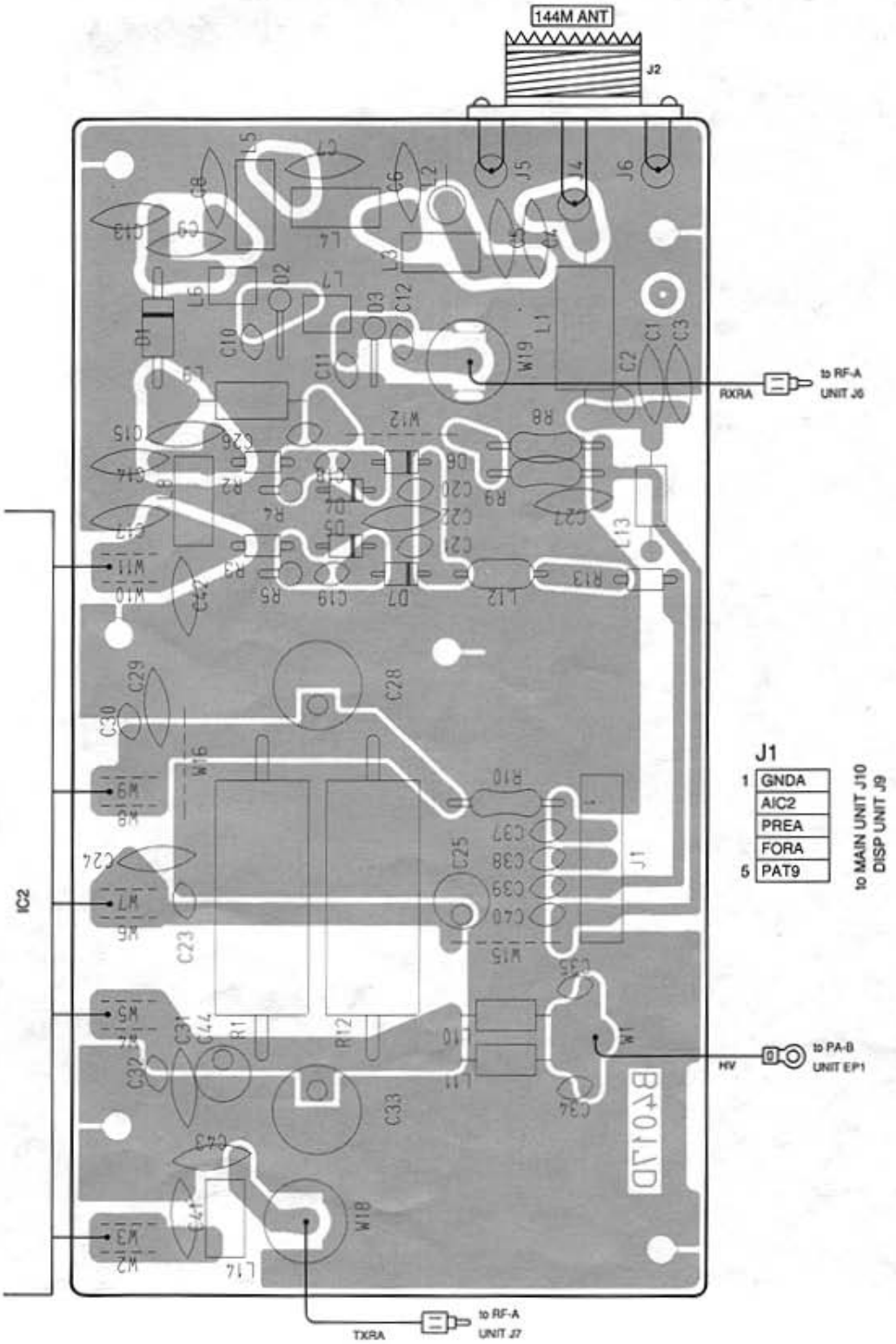

Downloaded from www.Manualslib.com manuals search engine

● PA-B UNIT

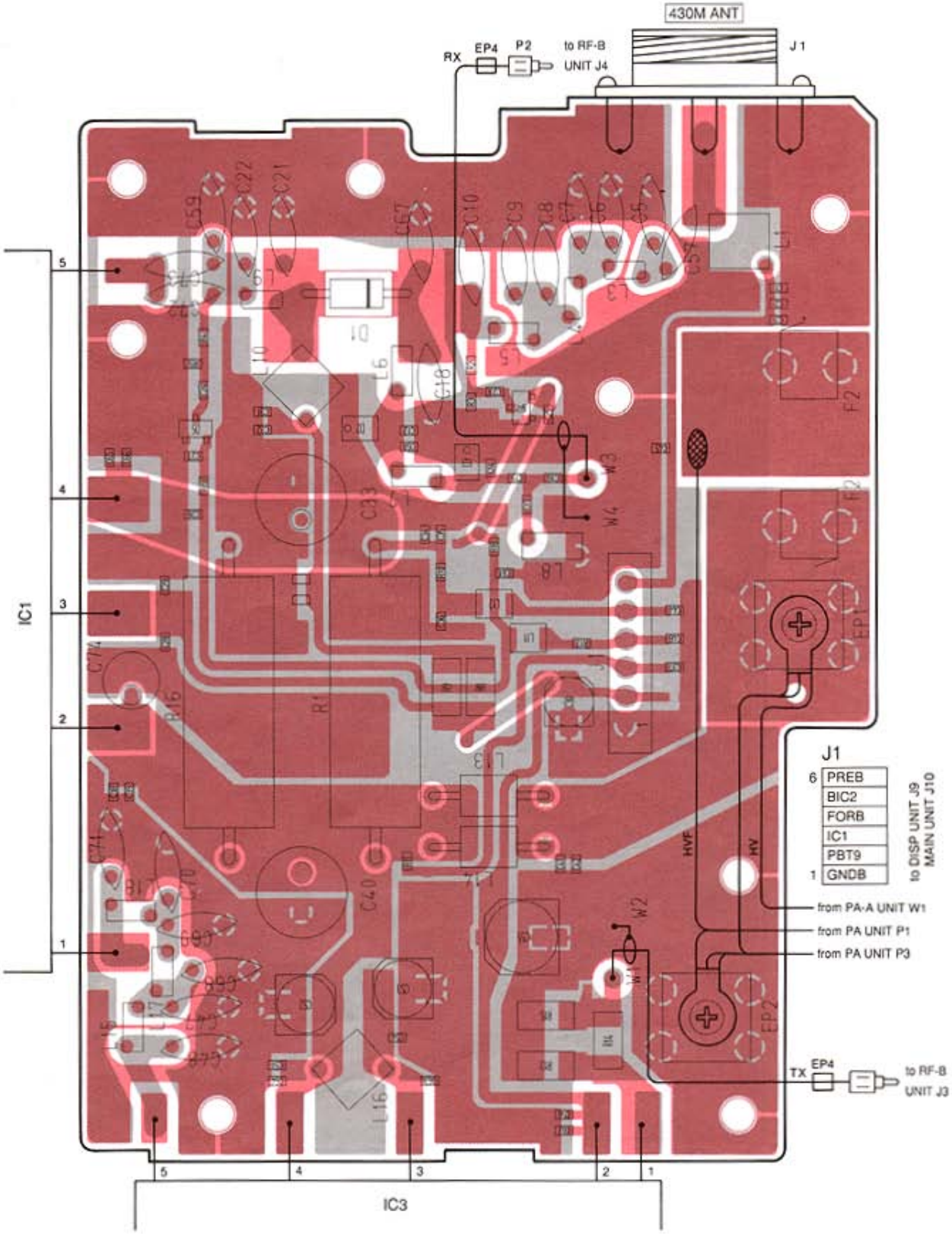

Downloaded from www.Manualslib.com manuals search engine

9-5 RF-A AND RF-B UNITS

• RF-A UNIT

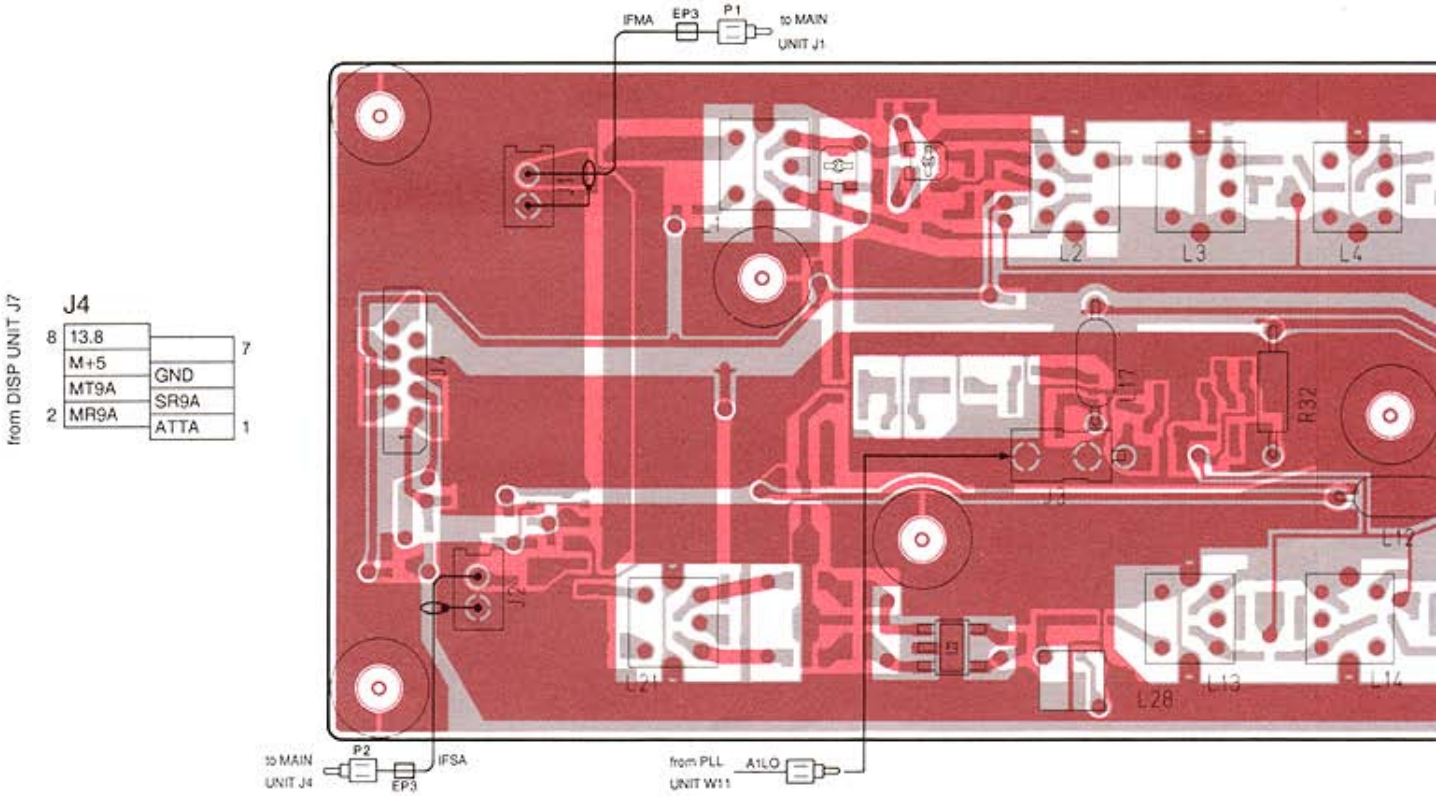

• RF-B UNIT

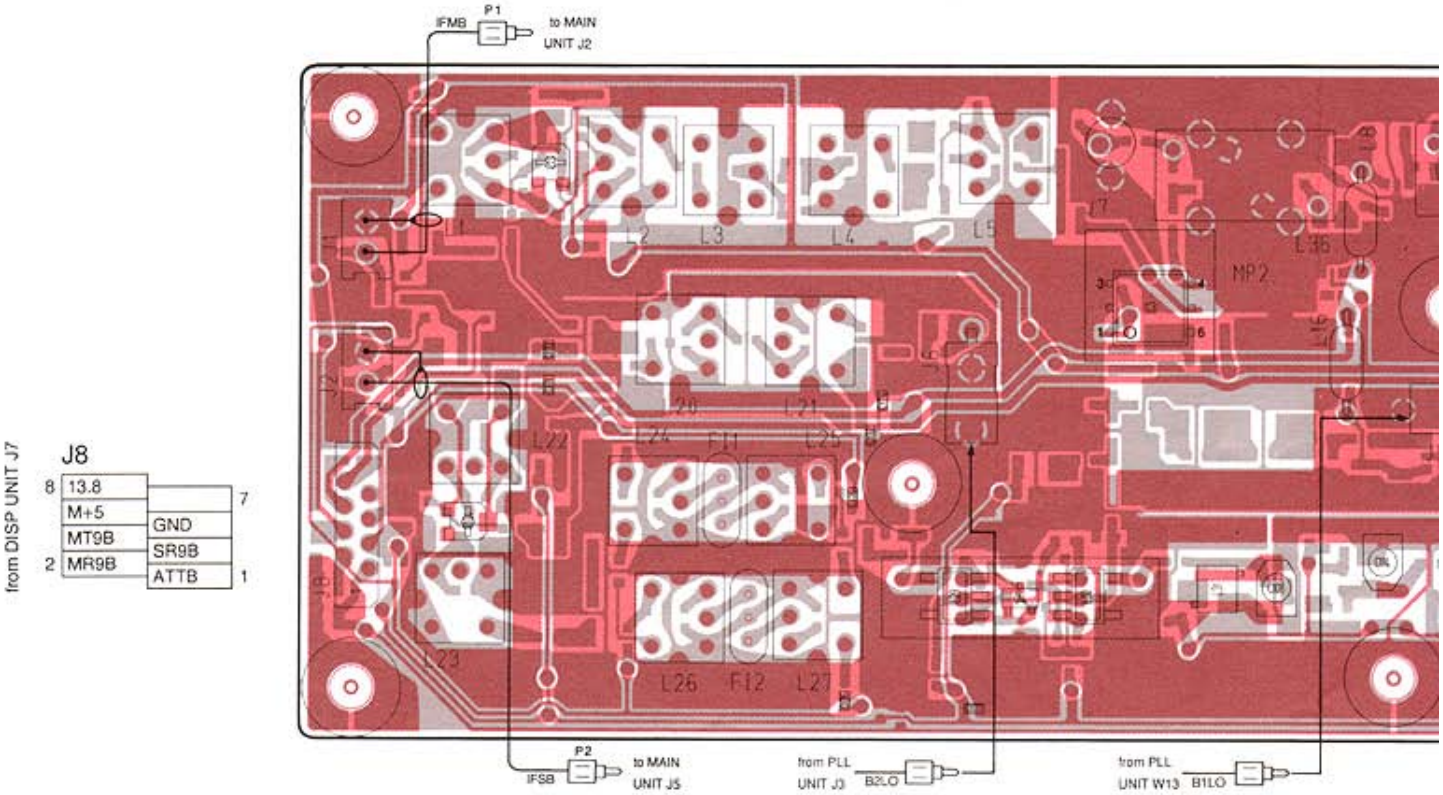

Downloaded from www.Manualslib.com manuals search engine

The combination of this page and the next page show the unit layout in the same configuration as the actual P. C. Board.

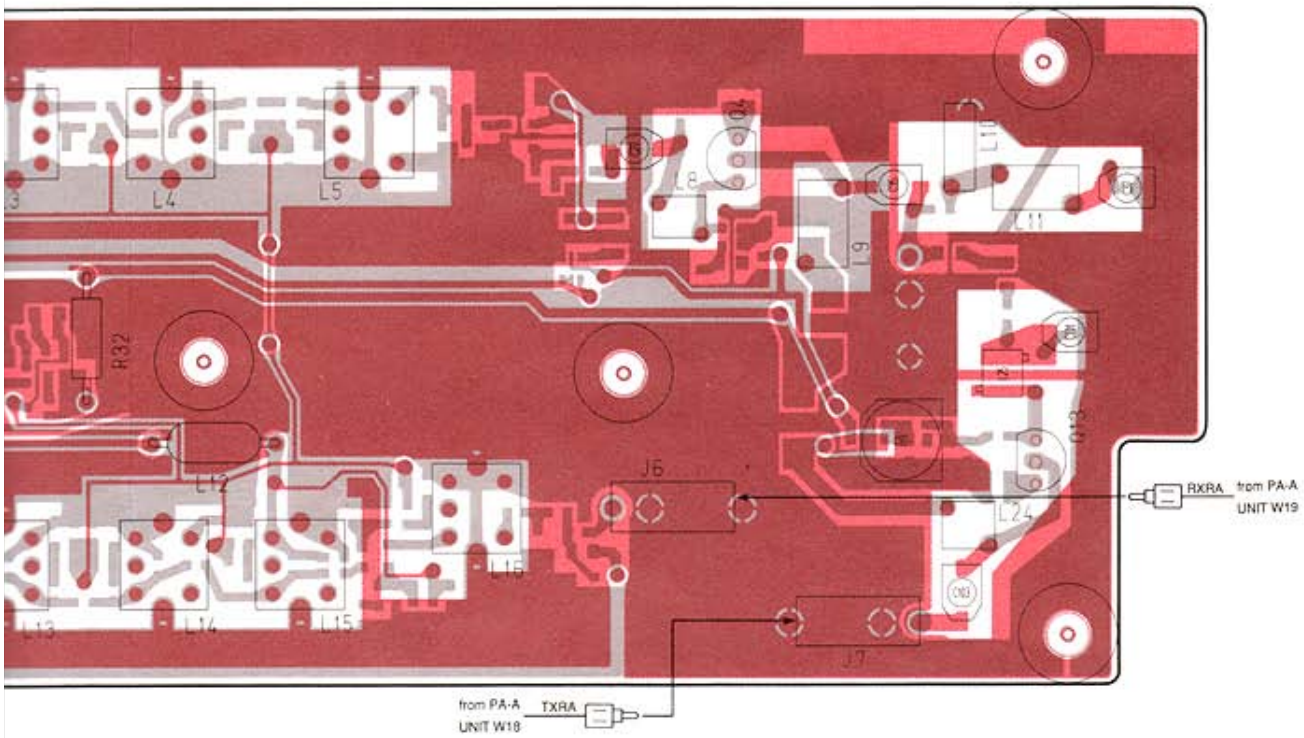

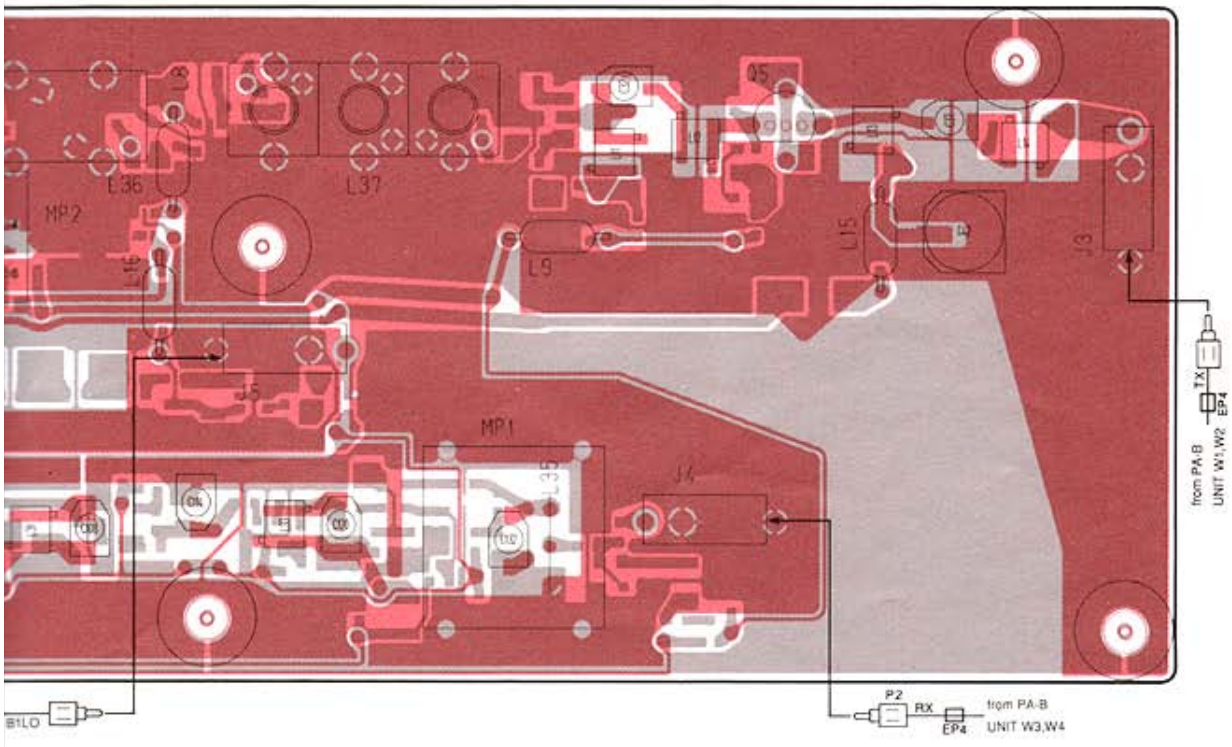

Downloaded from www.Manualslib.com manuals search engine

● RF-A UNIT

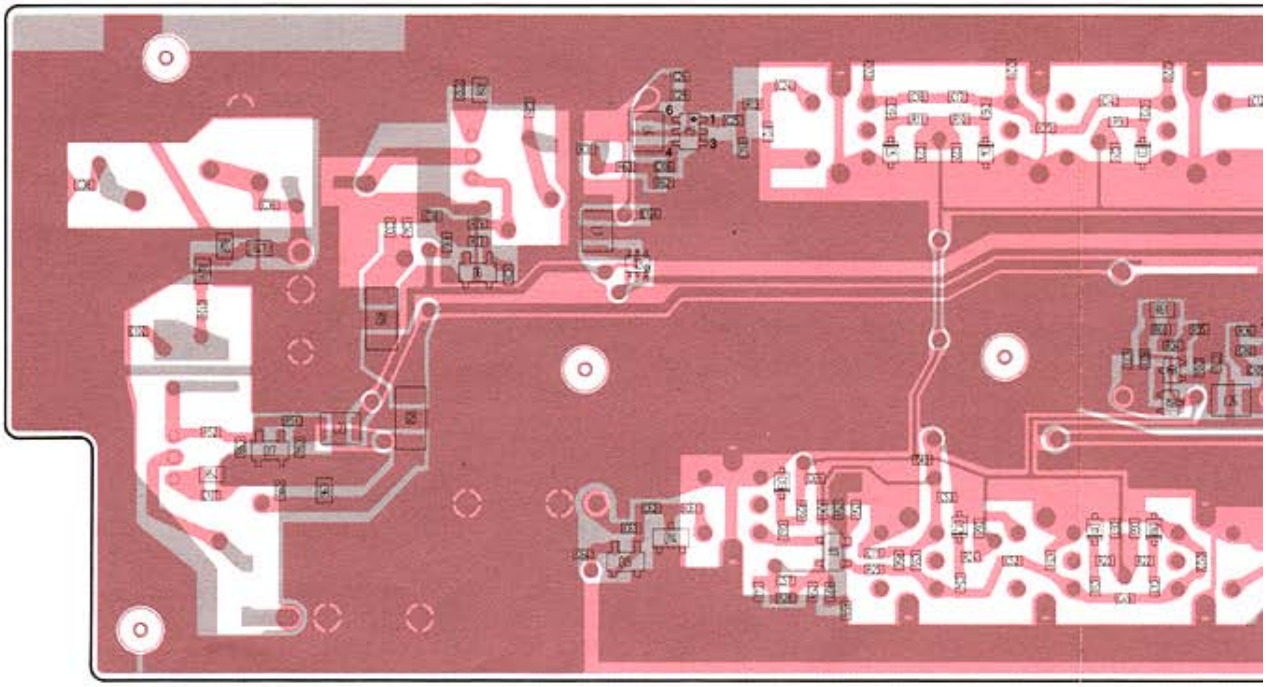

● RF-B UNIT

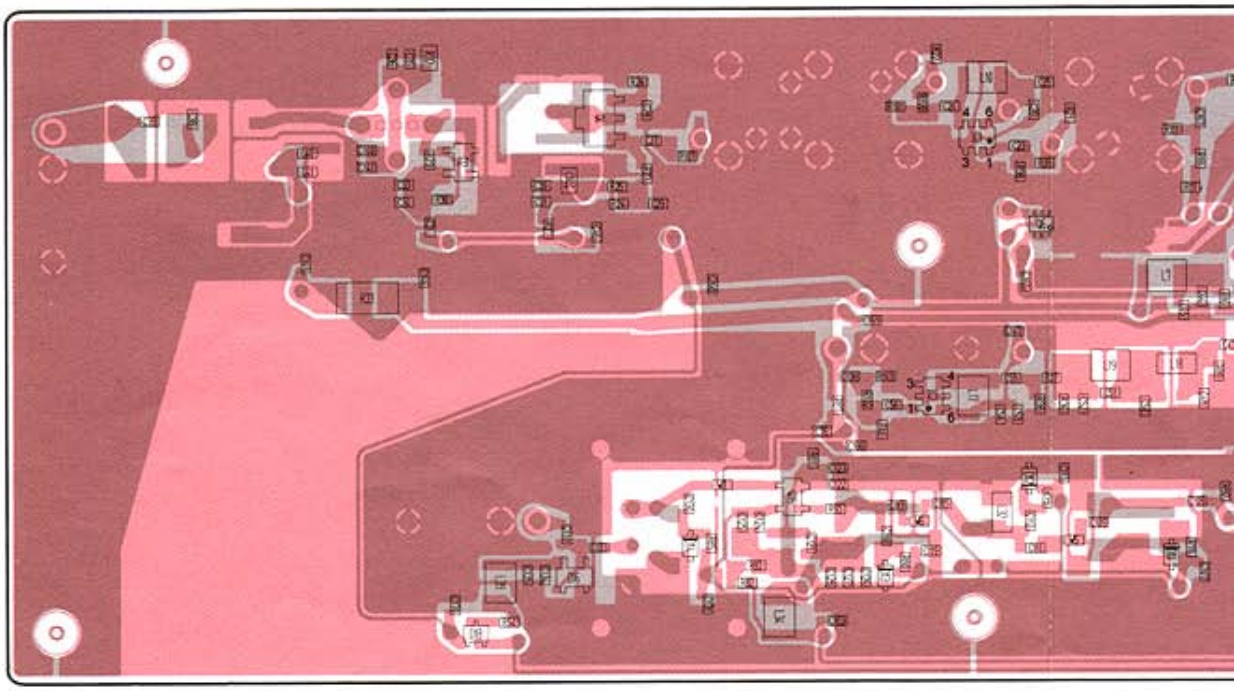

Downloaded from www.Manualslib.com manuals search engine

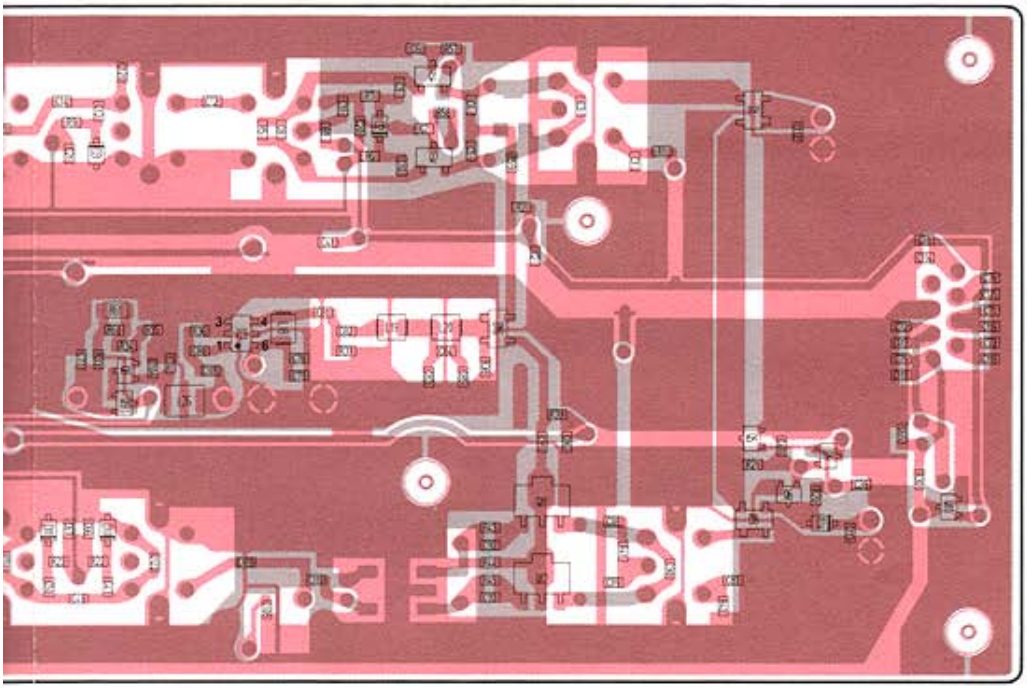

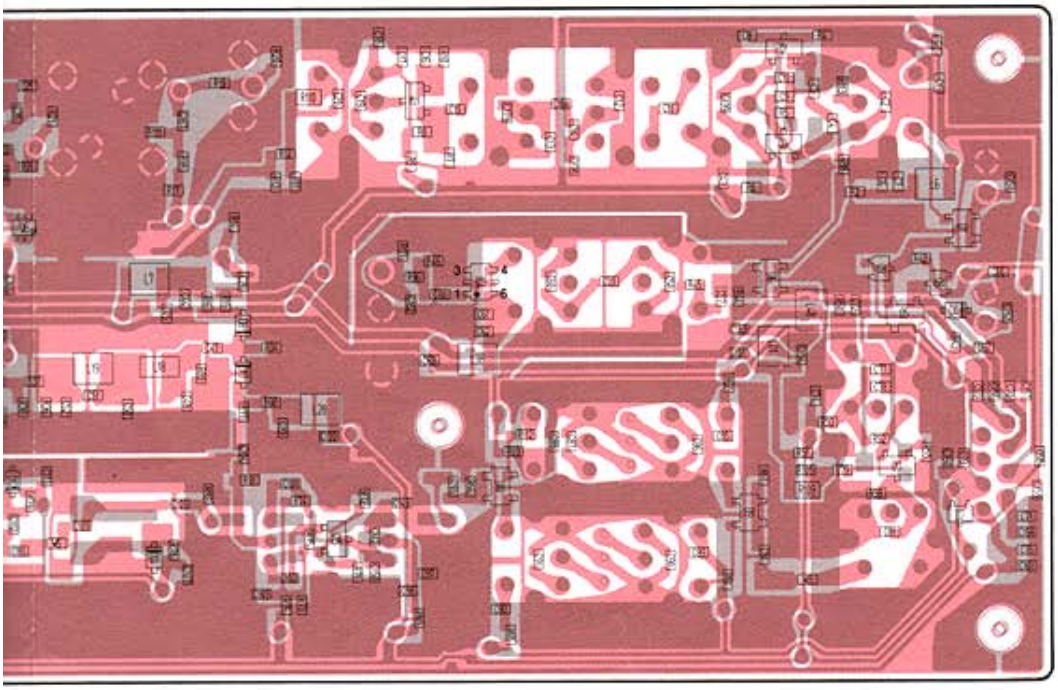

Downloaded from www.Manualslib.com manuals search engine

SECTION 10 BLOCK DIAGRAM

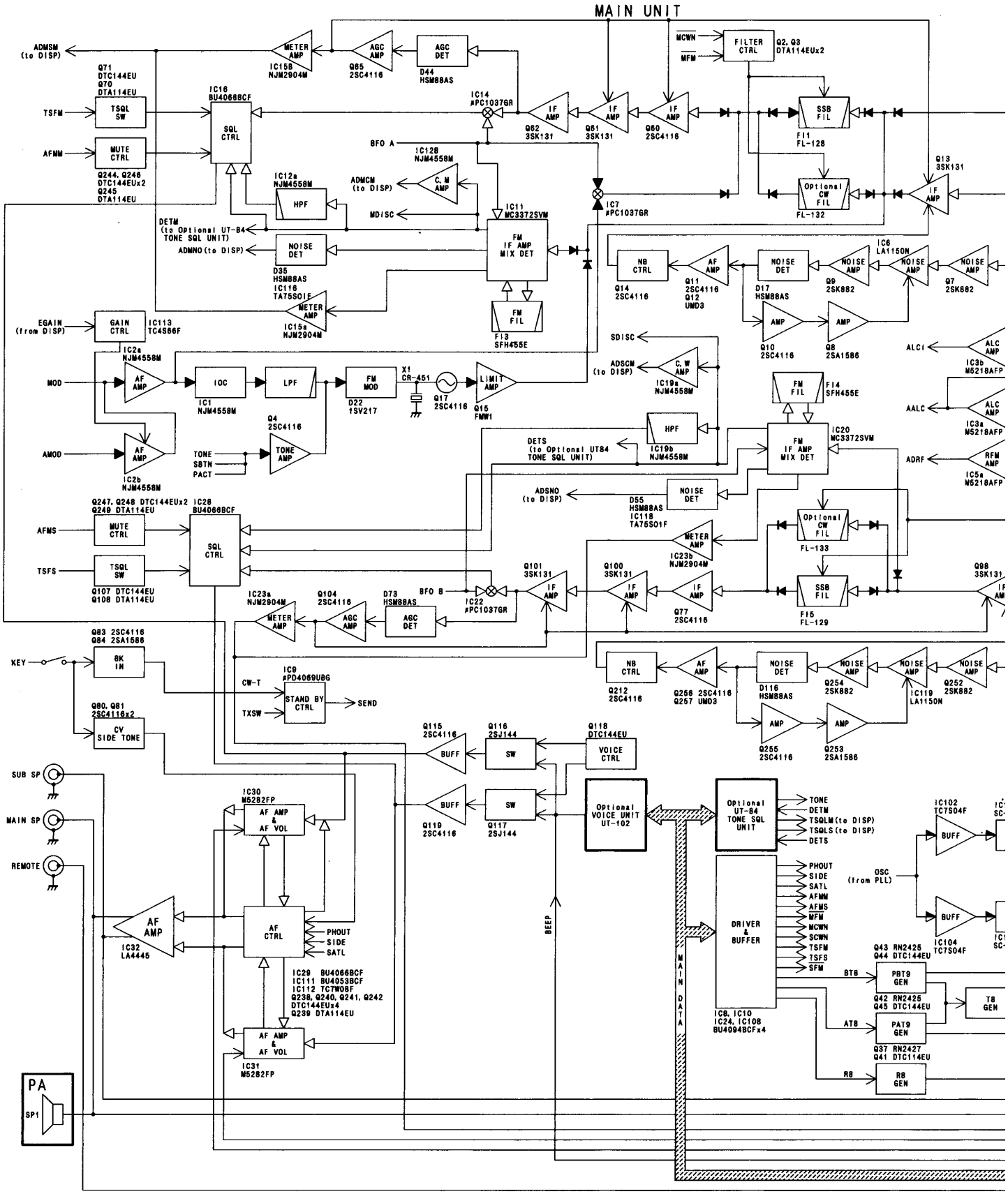

Downloaded from www.Manualslib.com manuals search engine

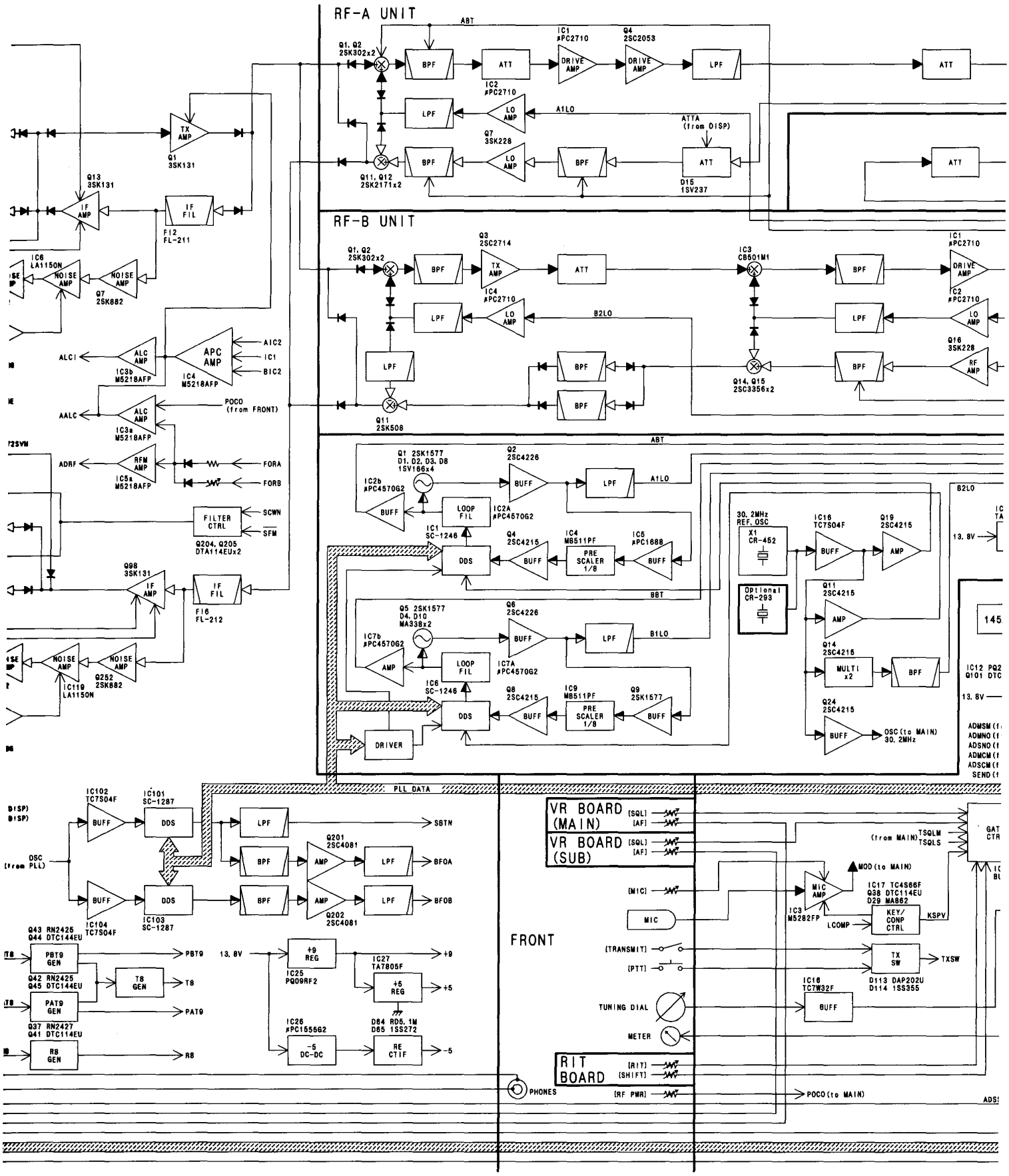

Downloaded from www.Manualslib.com manuals search engine

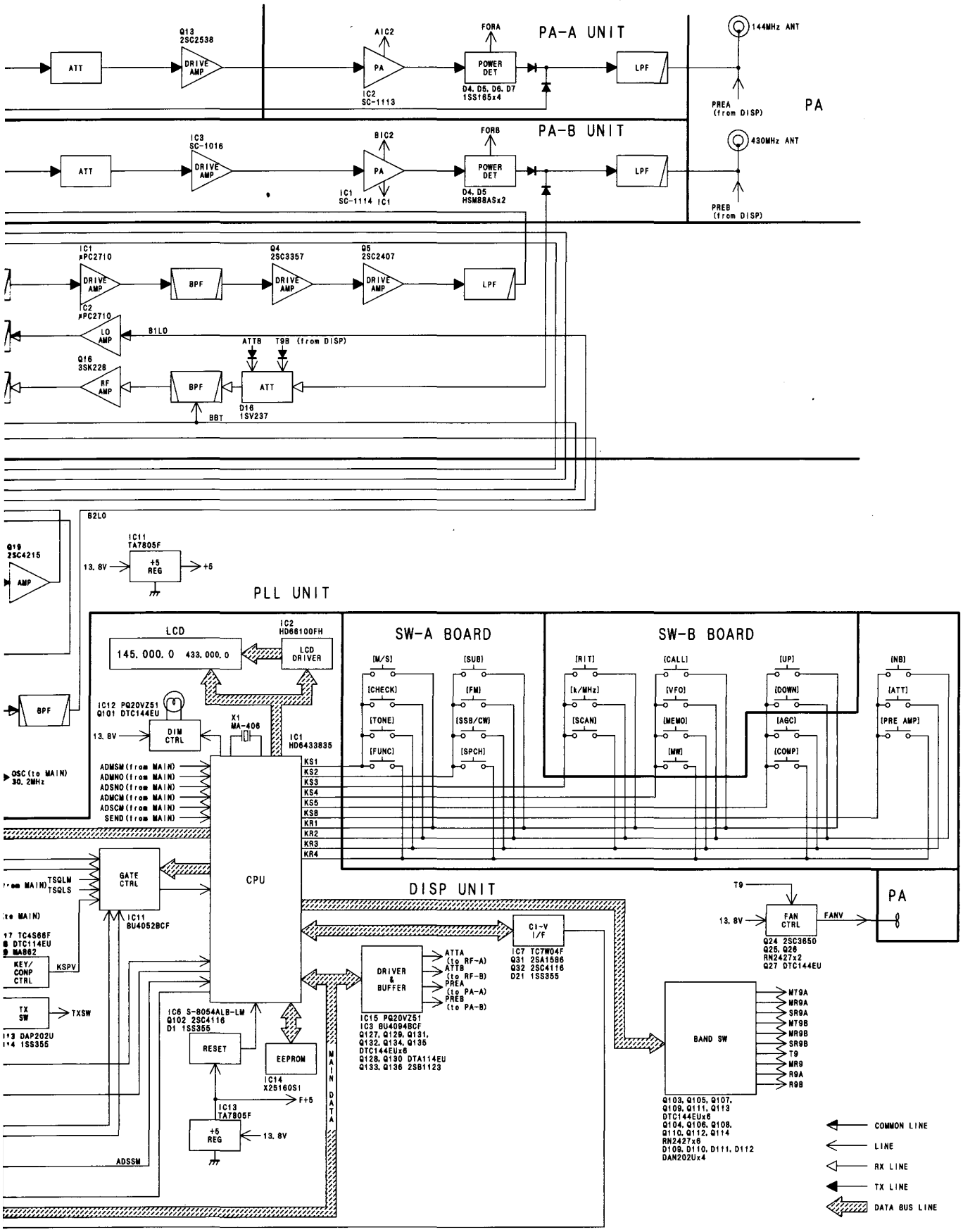

Downloaded from www.Manualslib.com manuals search engine

SECTION 11 VOLTAGE DIAGRAM

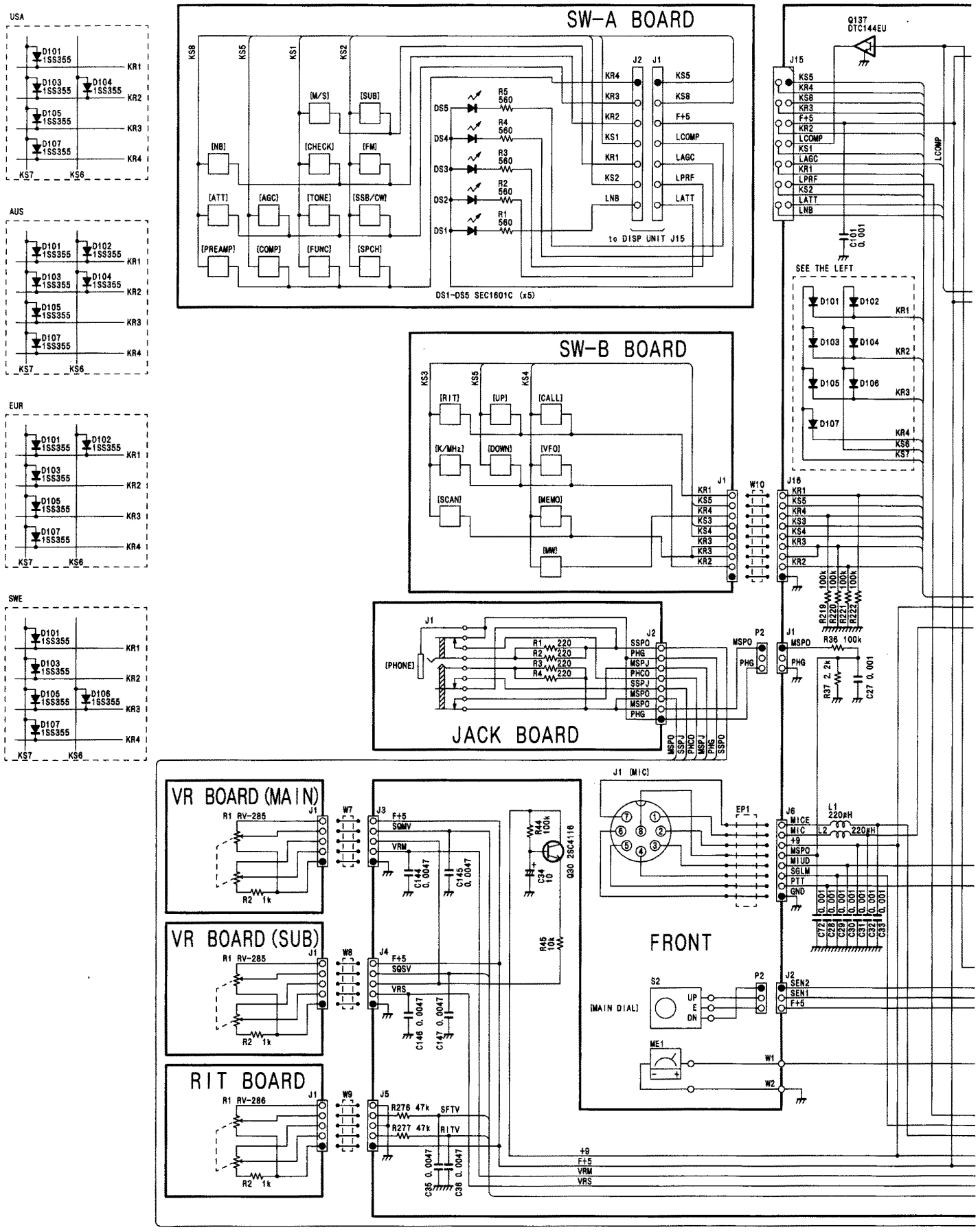

Downloaded from www.Manualslib.com manuals search engine

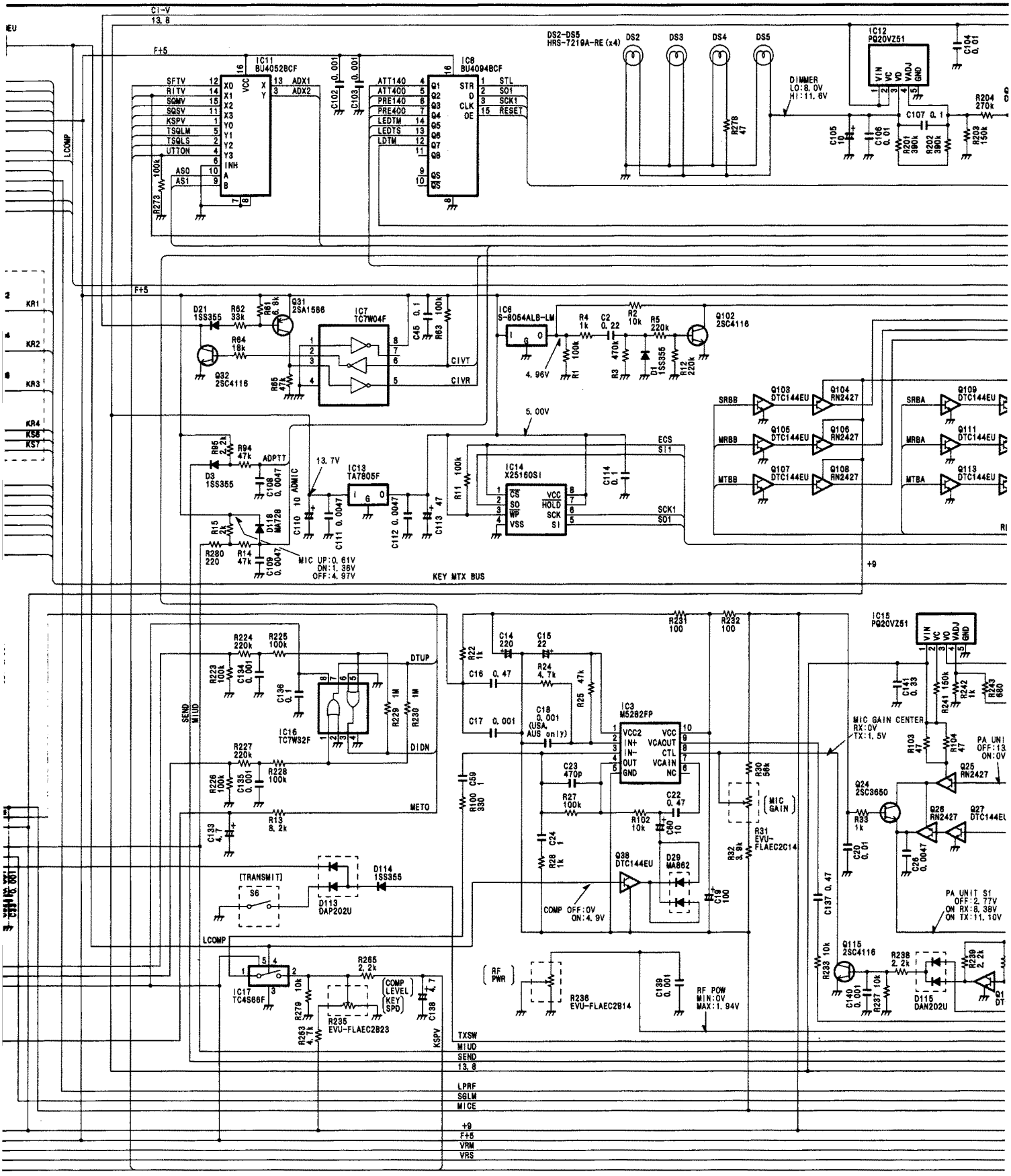

Downloaded from www.Manualslib.com manuals search engine

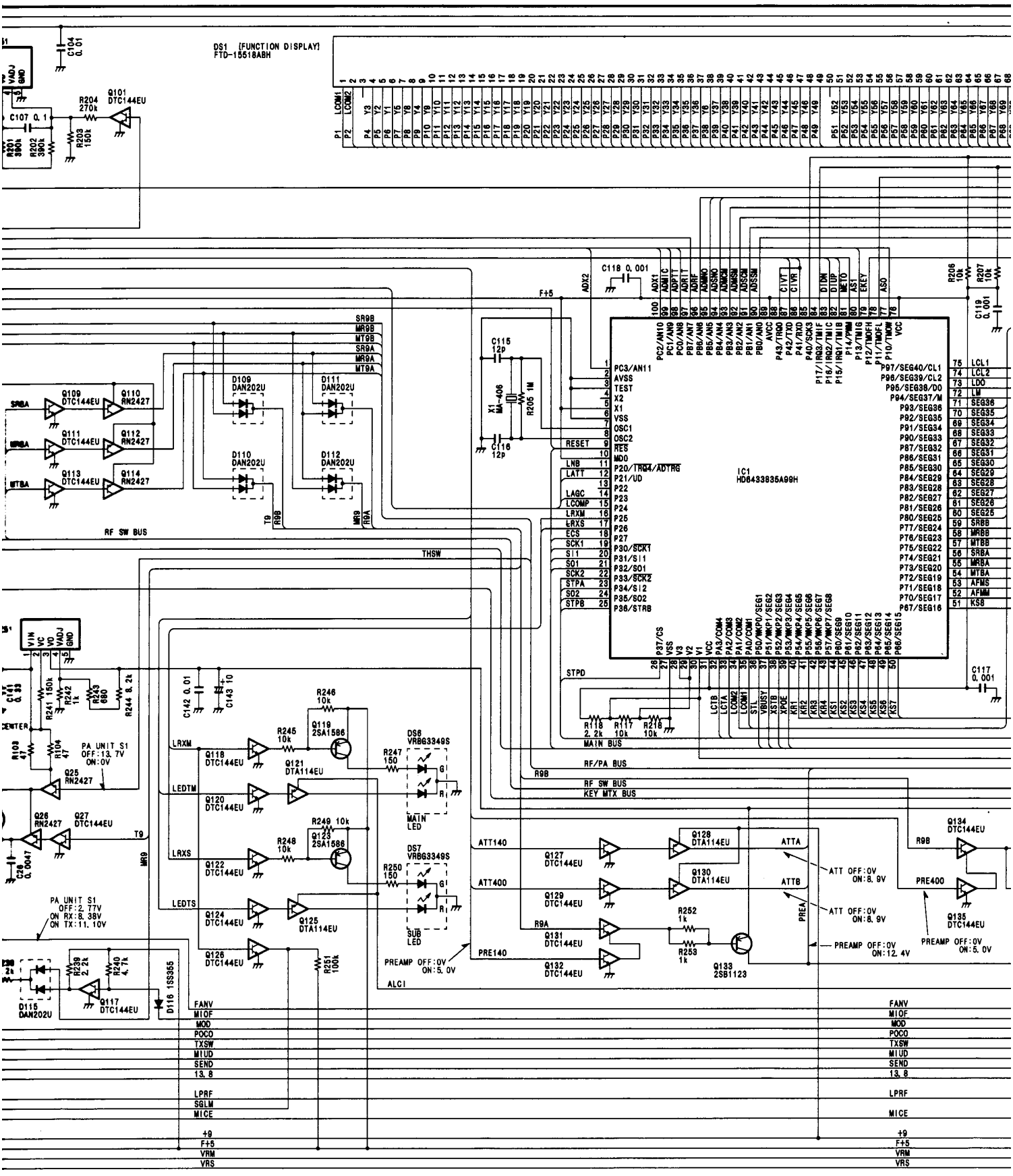

Downloaded from www.Manualslib.com manuals search engine

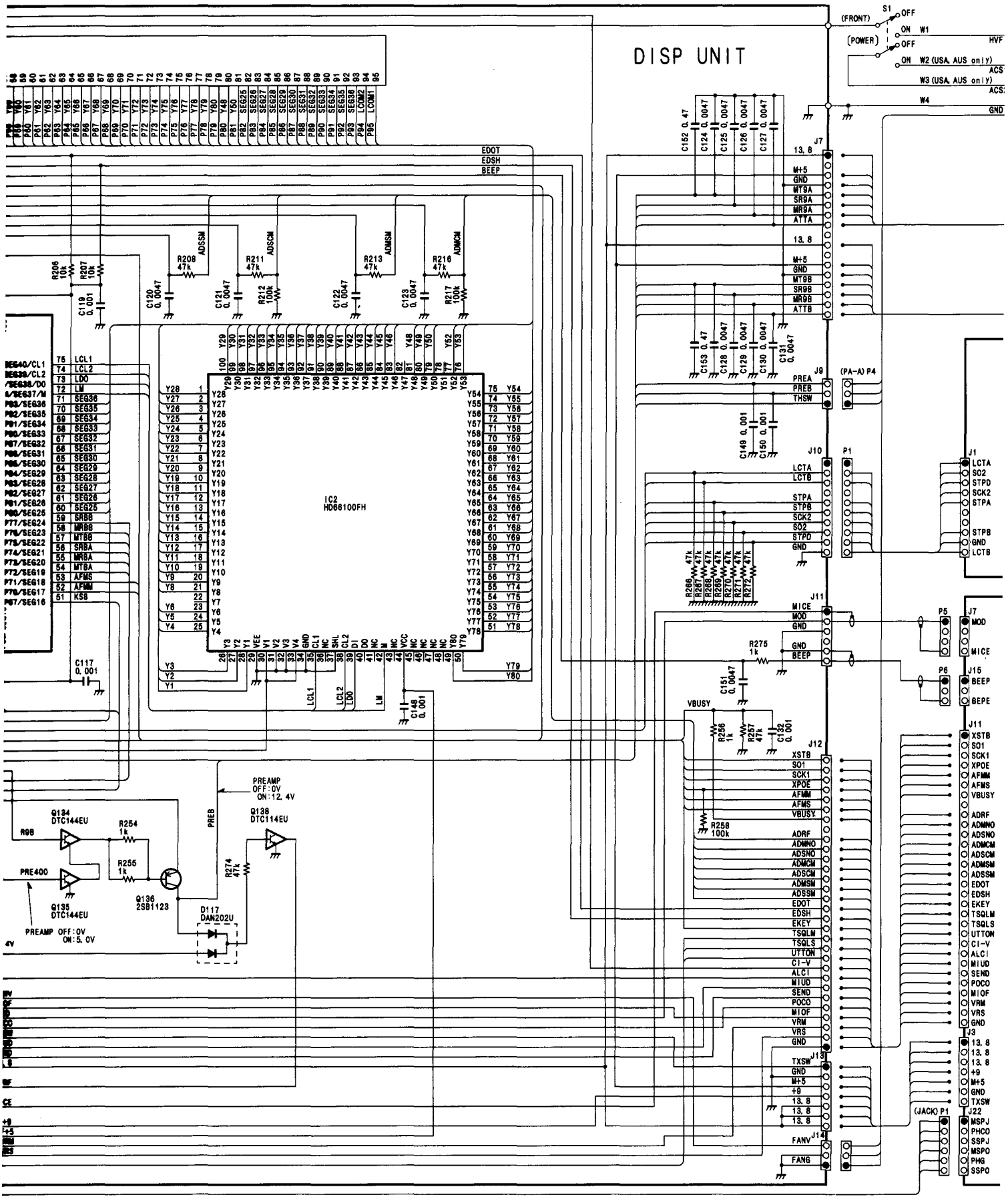

Downloaded from www.Manualslib.com manuals search engine

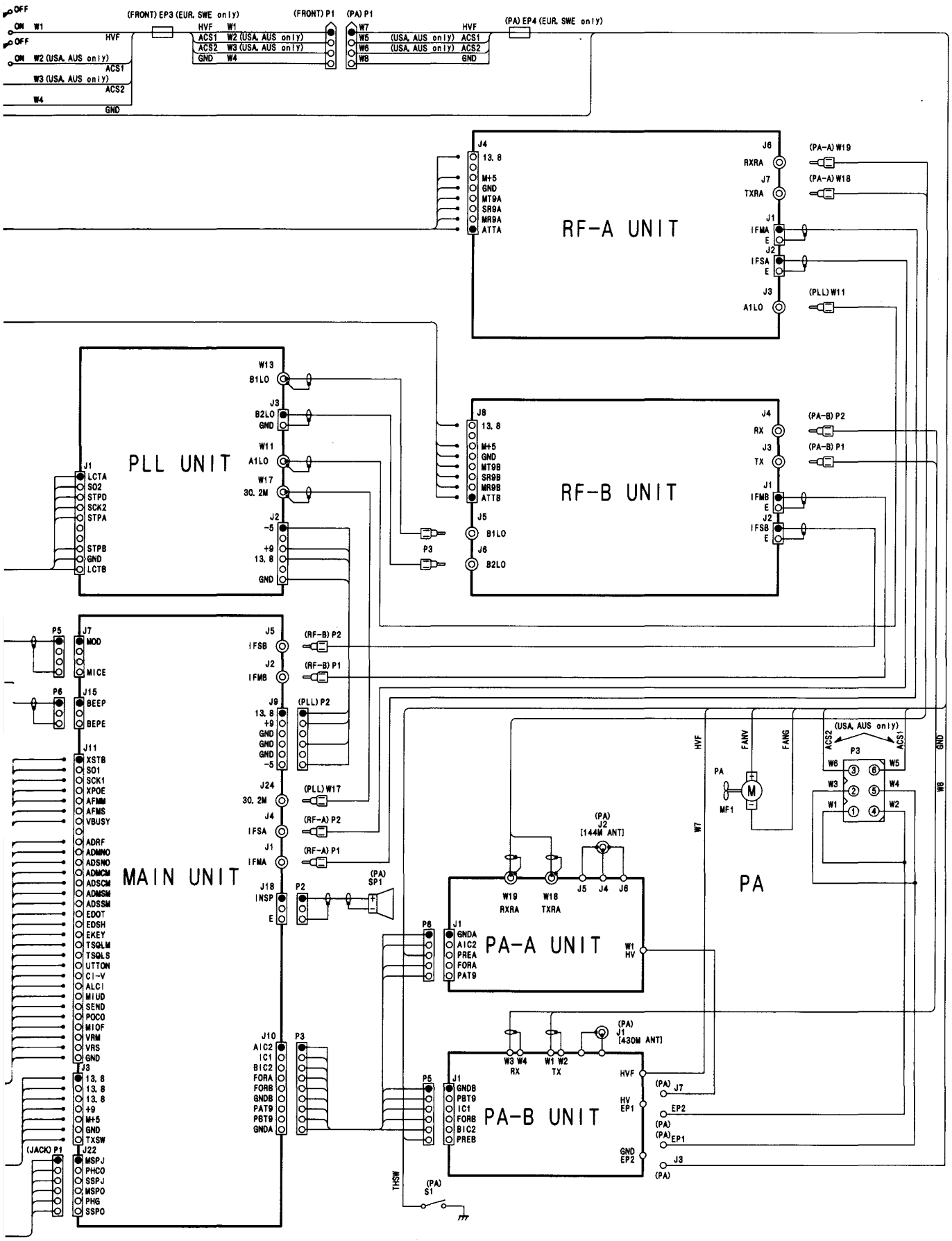

Downloaded from www.Manualslib.com manuals search engine

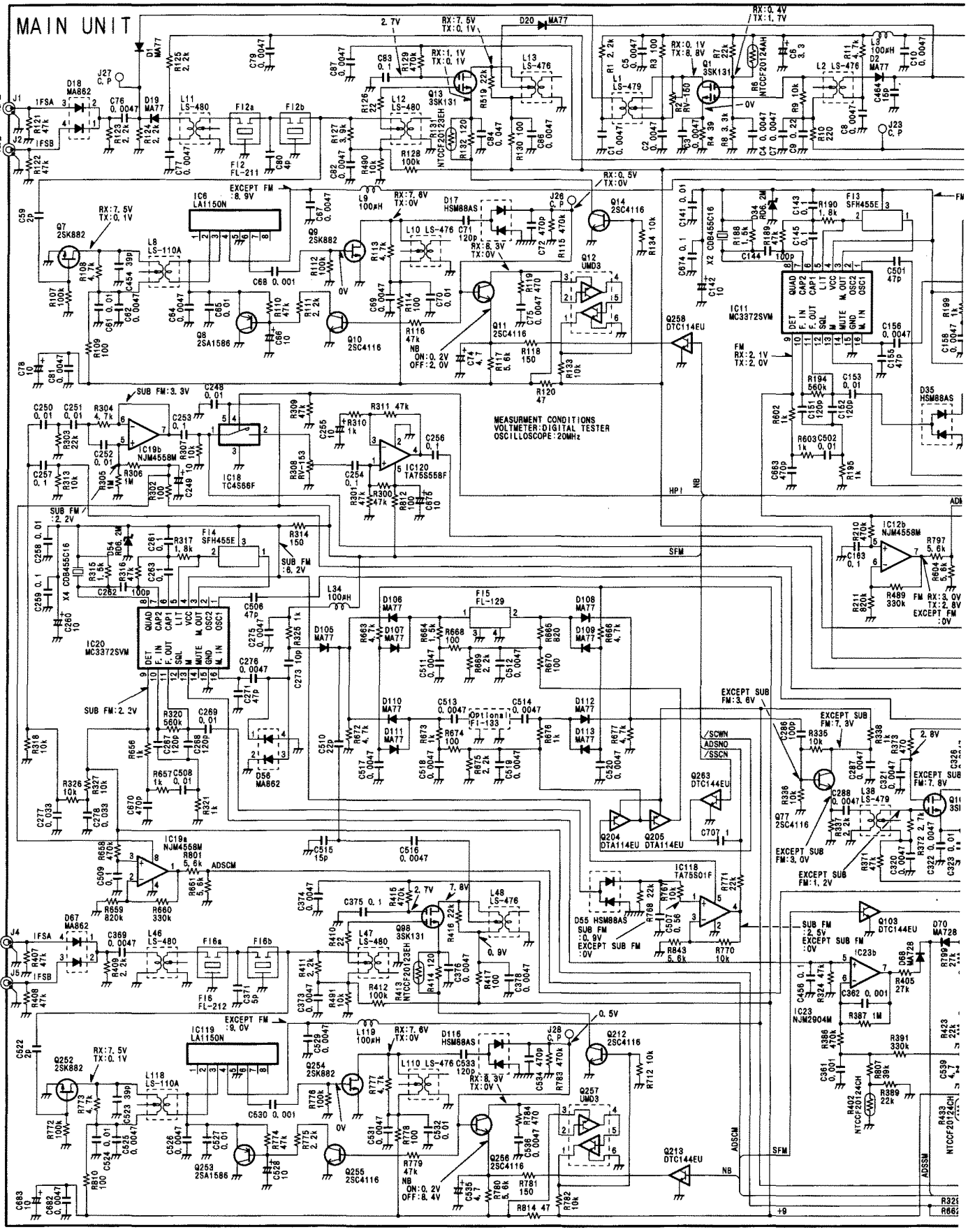

Downloaded from www.Manualslib.com manuals search engine

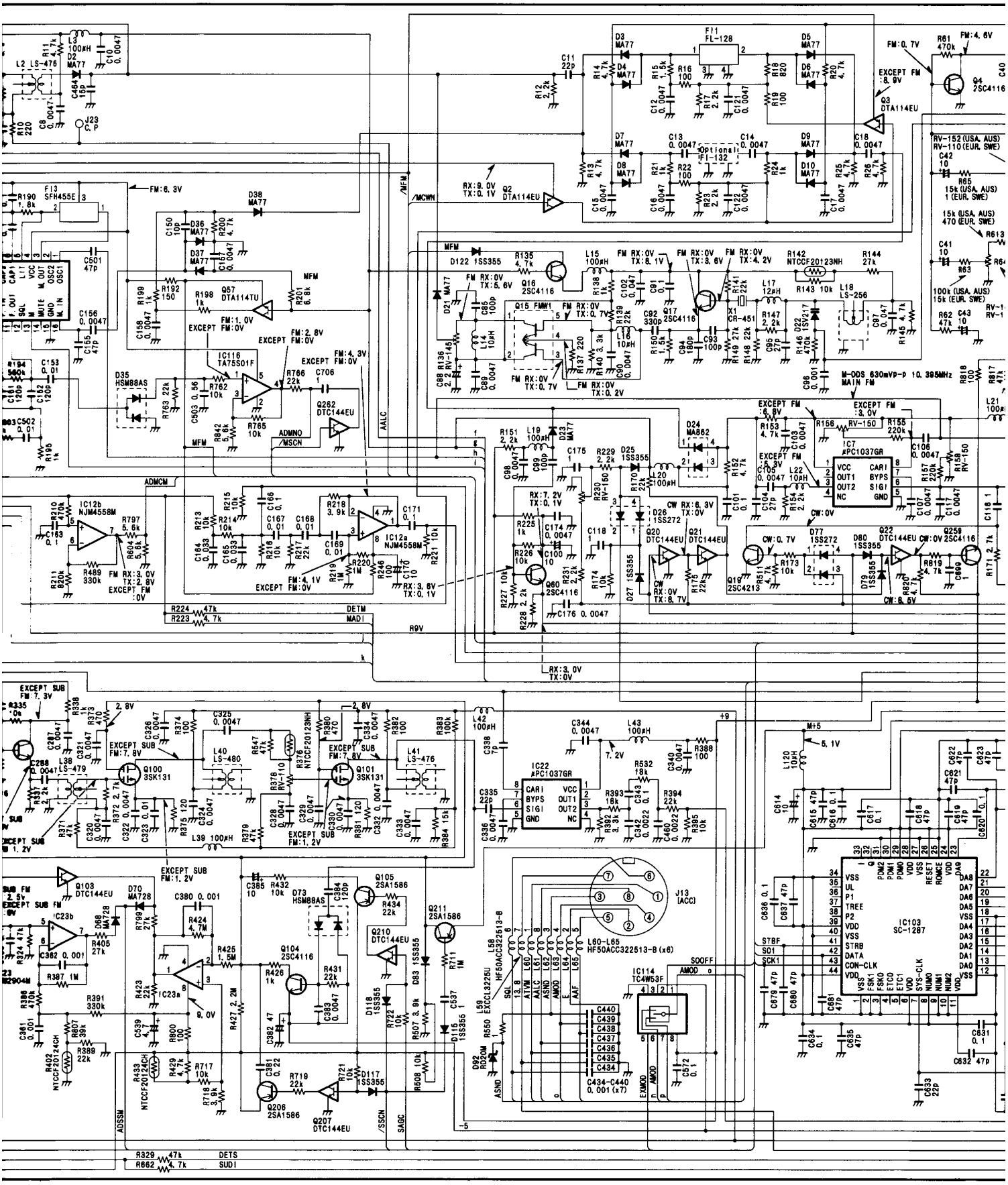

Downloaded from www.Manualslib.com manuals search engine

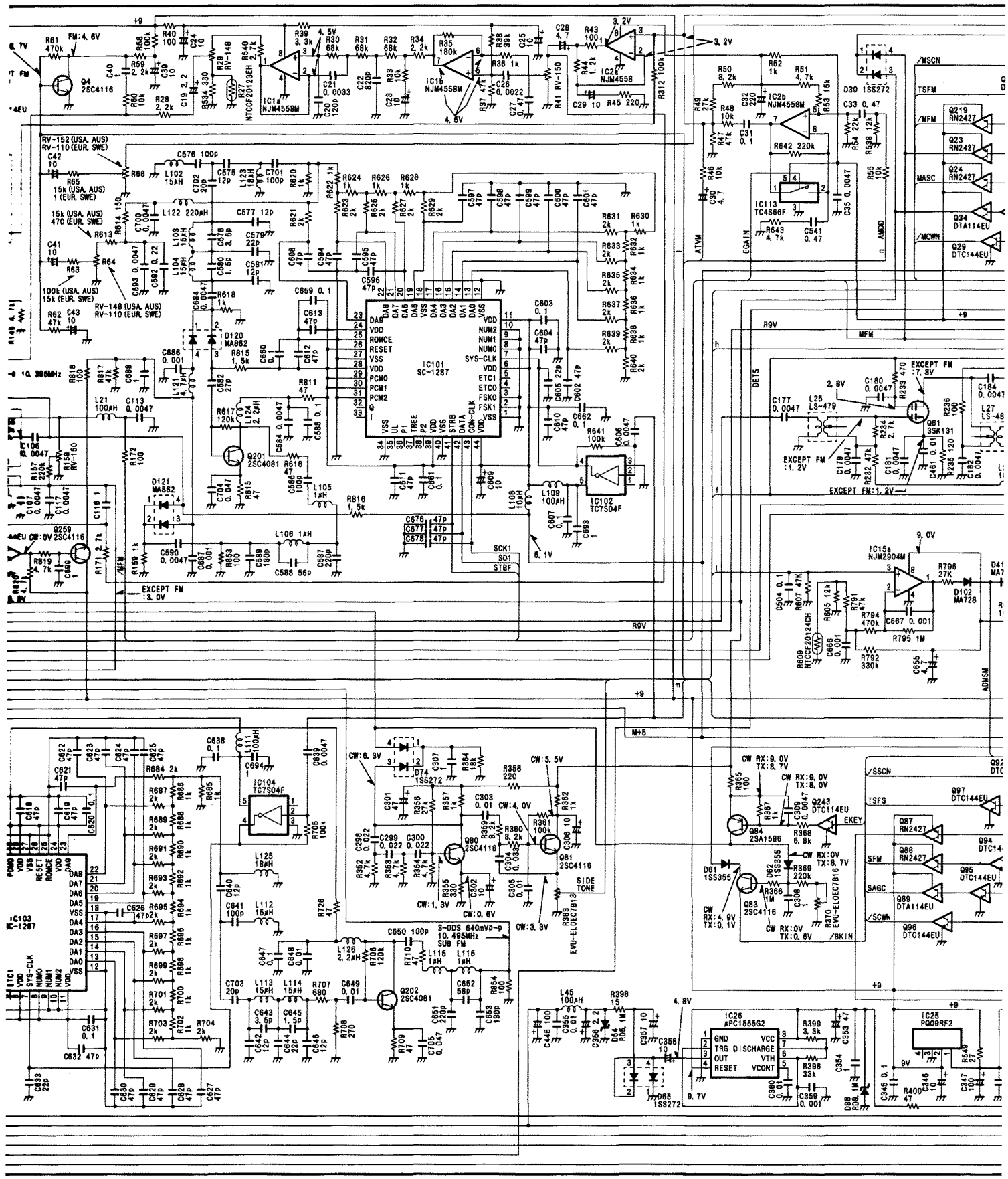

Downloaded from www.Manualslib.com manuals search engine

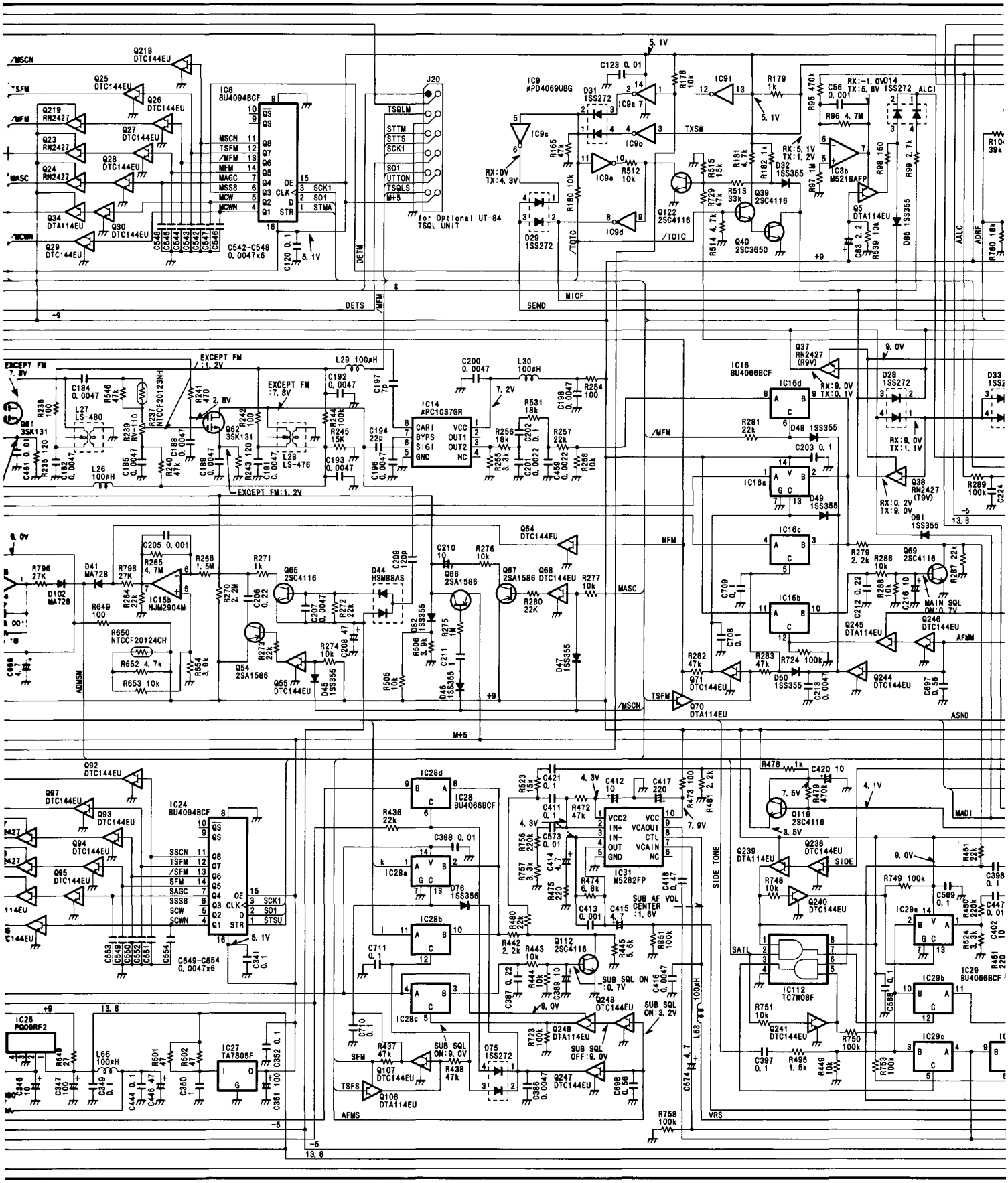

Downloaded from www.Manualslib.com manuals search engine

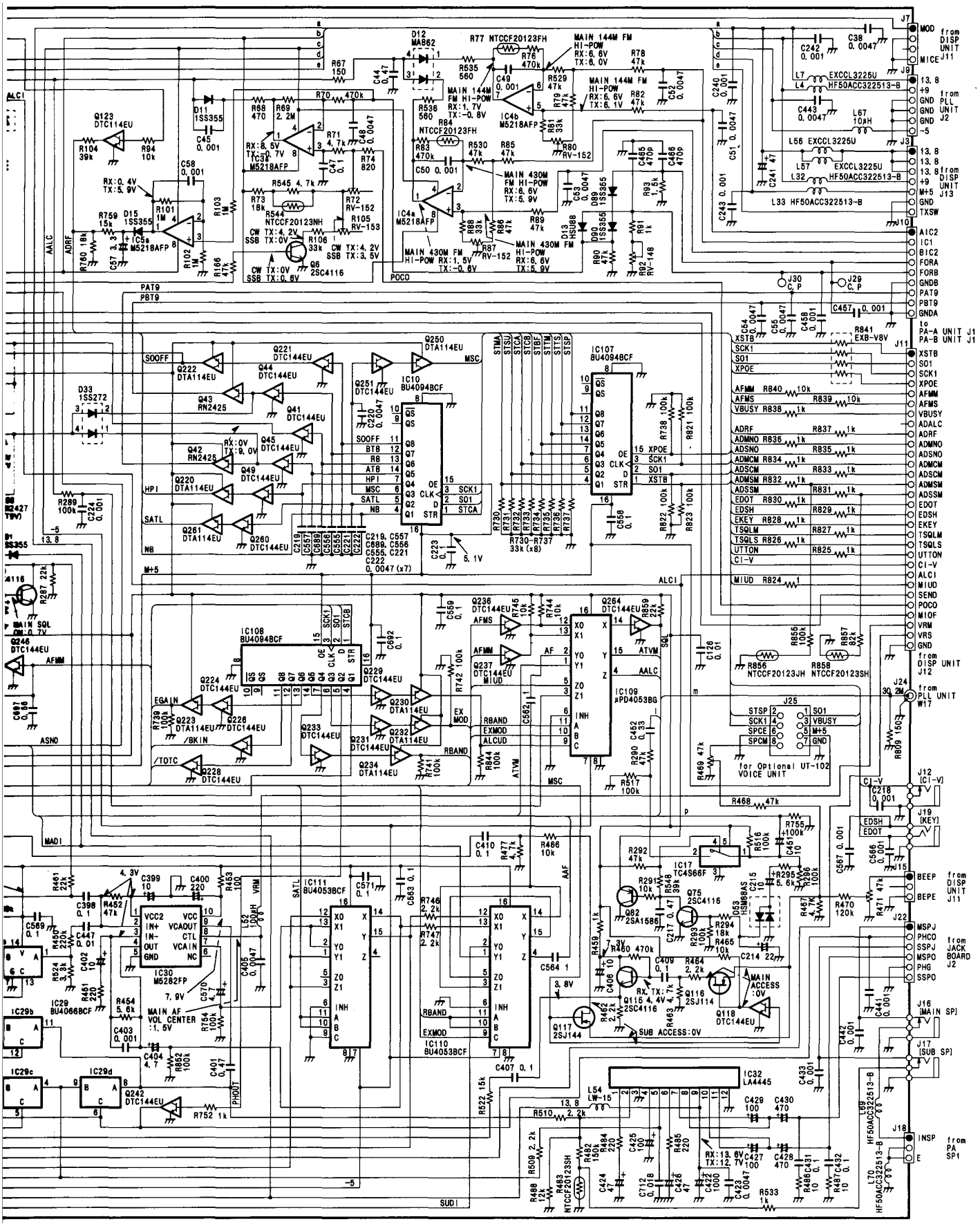

Downloaded from www.Manualslib.com manuals search engine

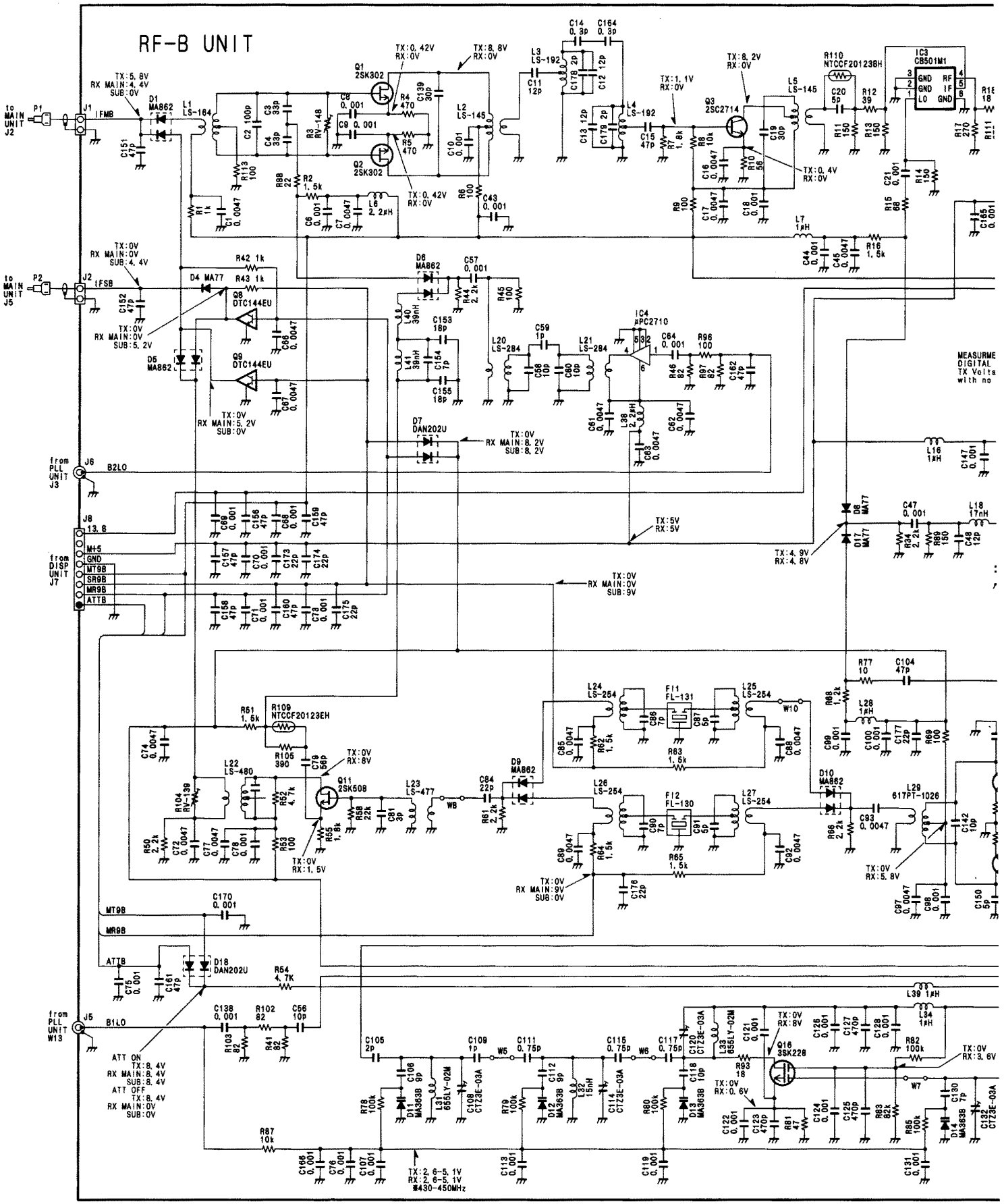

Downloaded from www.Manualslib.com manuals search engine

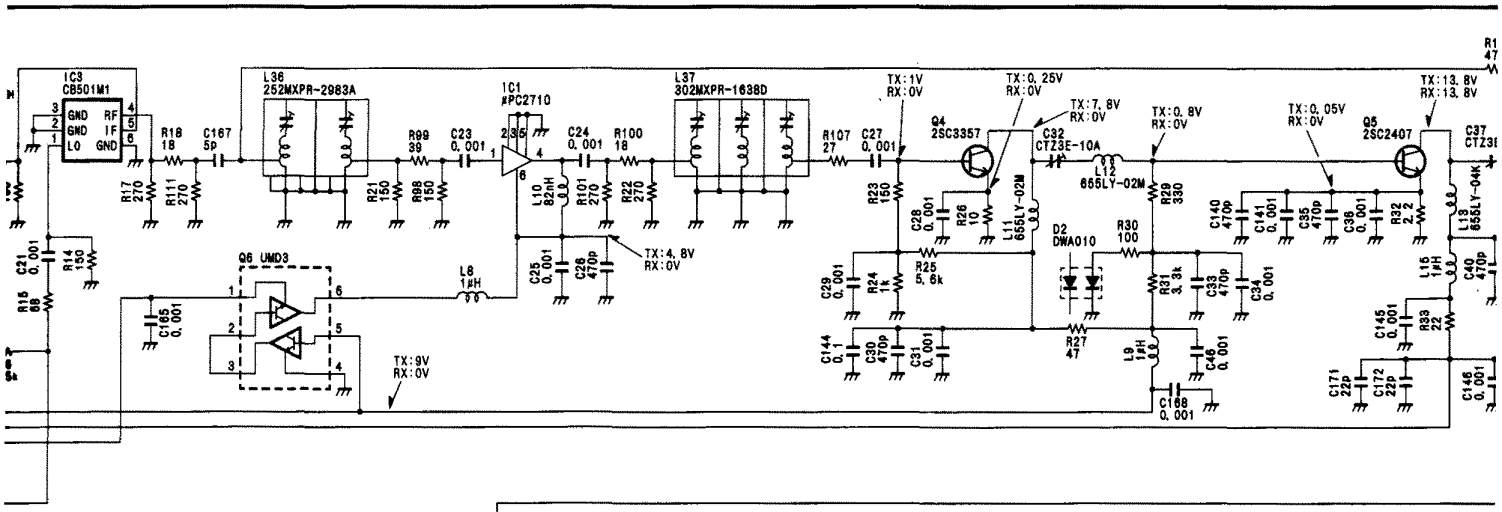

MEASURMENT CONDITIONS
DIGITAL MULTIMETER:50kΩ/V DC
TX Voltage is measured in SSB mode
with no modulation.

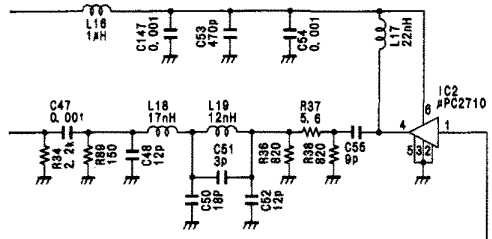

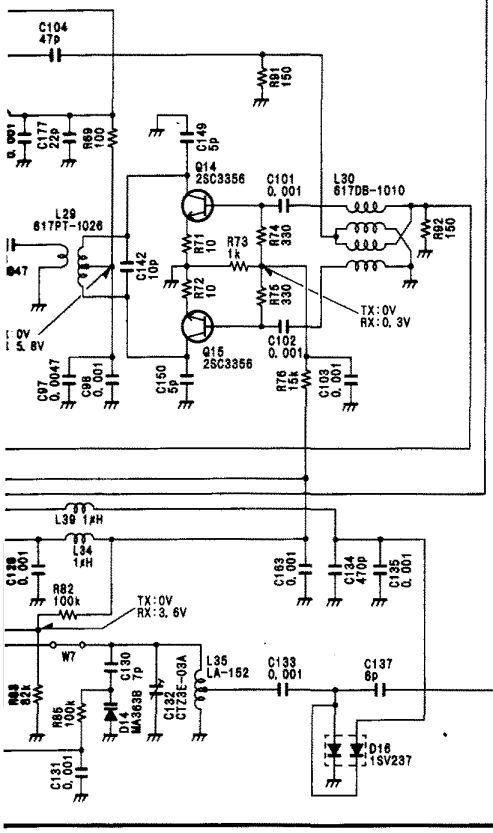

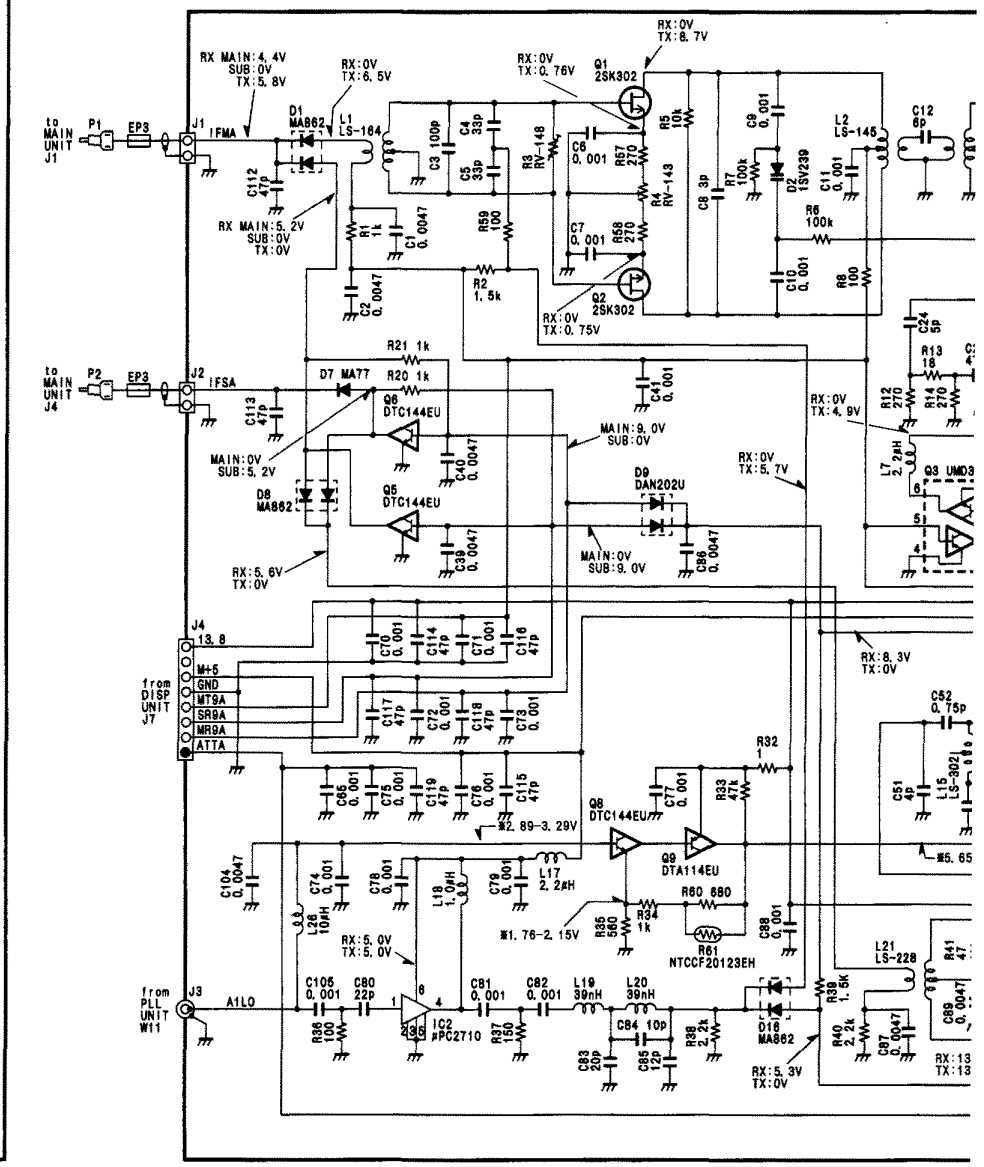

Downloaded from www.Manualslib.com manuals search engine

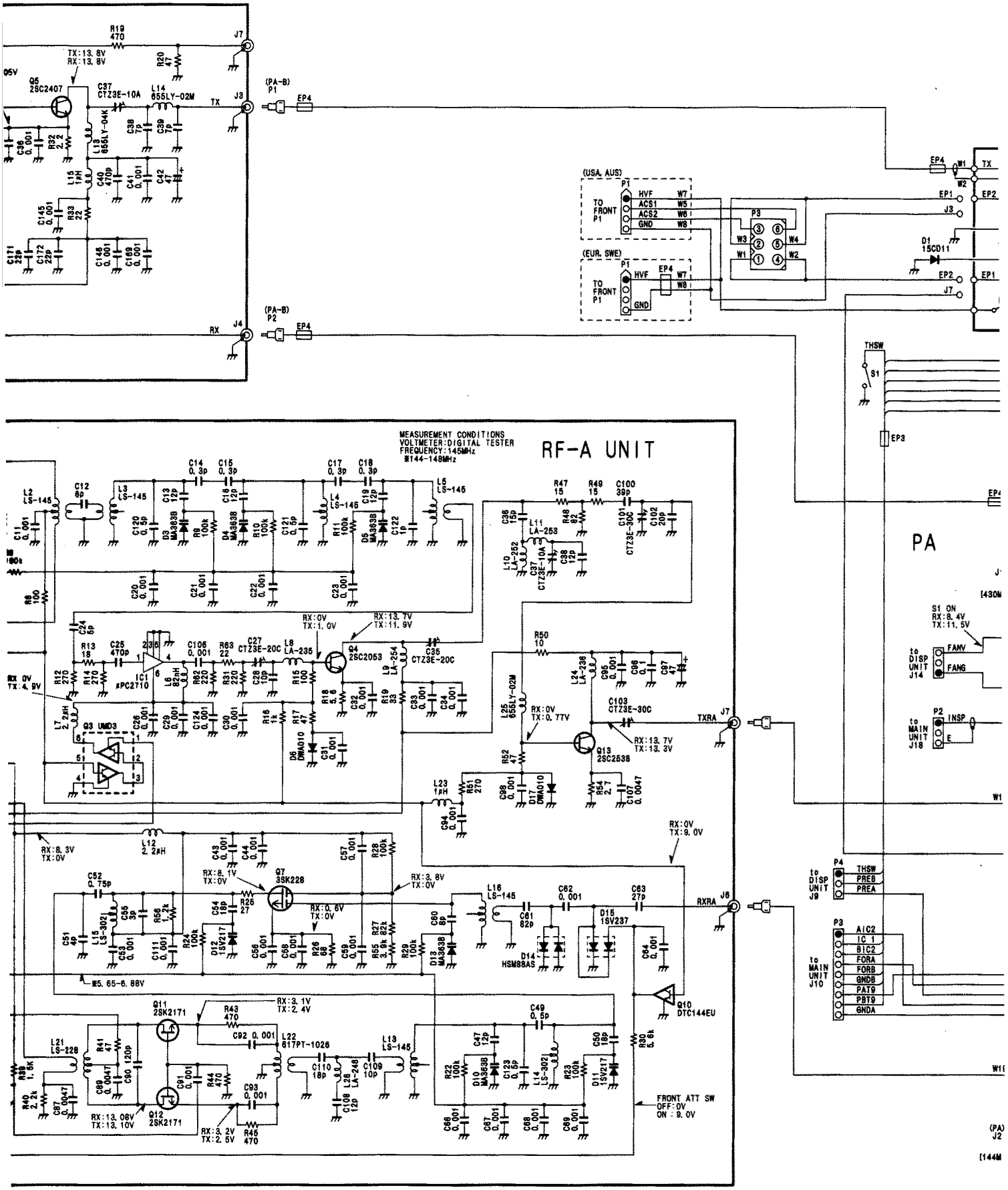

Downloaded from www.Manualslib.com manuals search engine

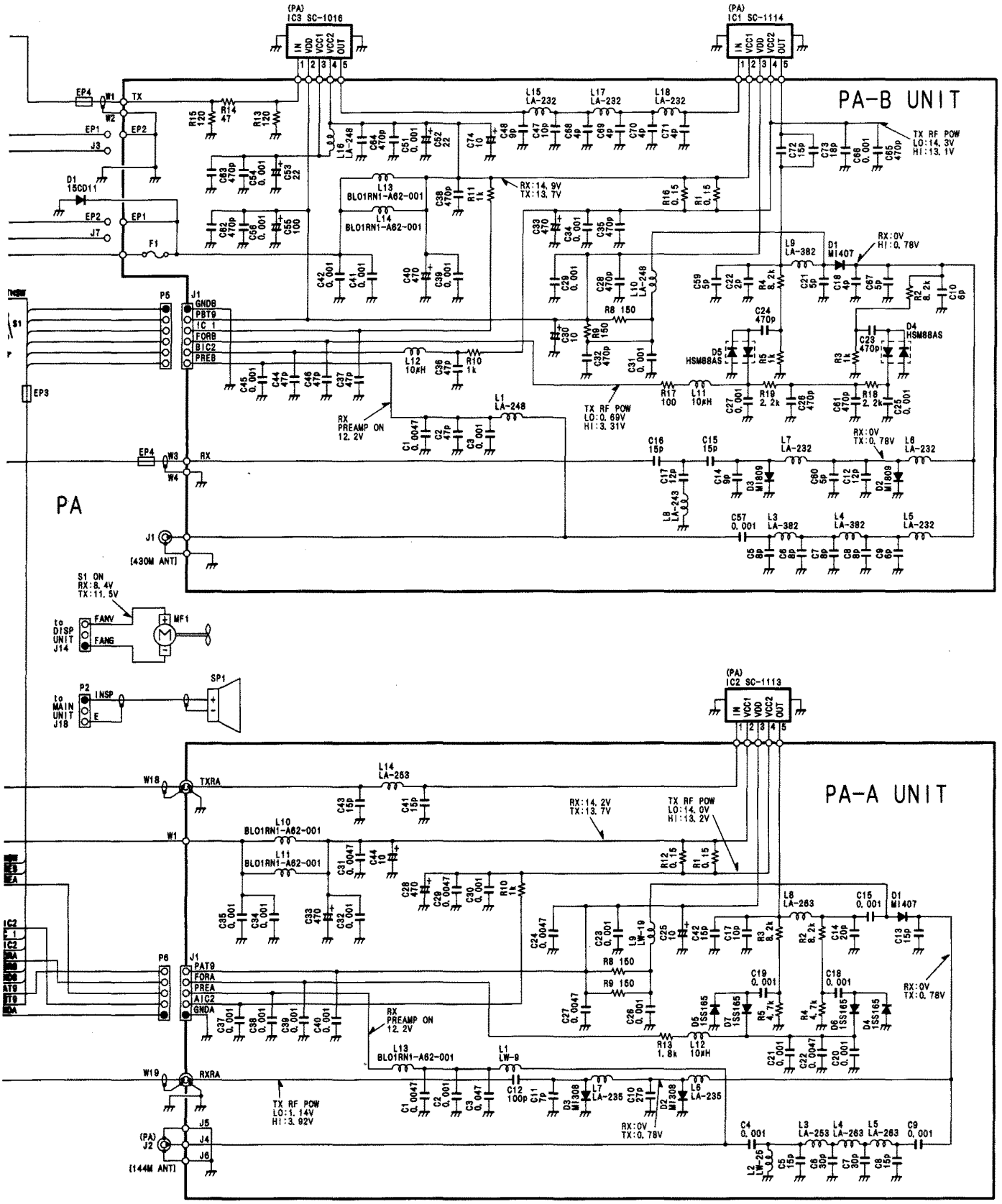

Downloaded from www.Manualslib.com manuals search engine

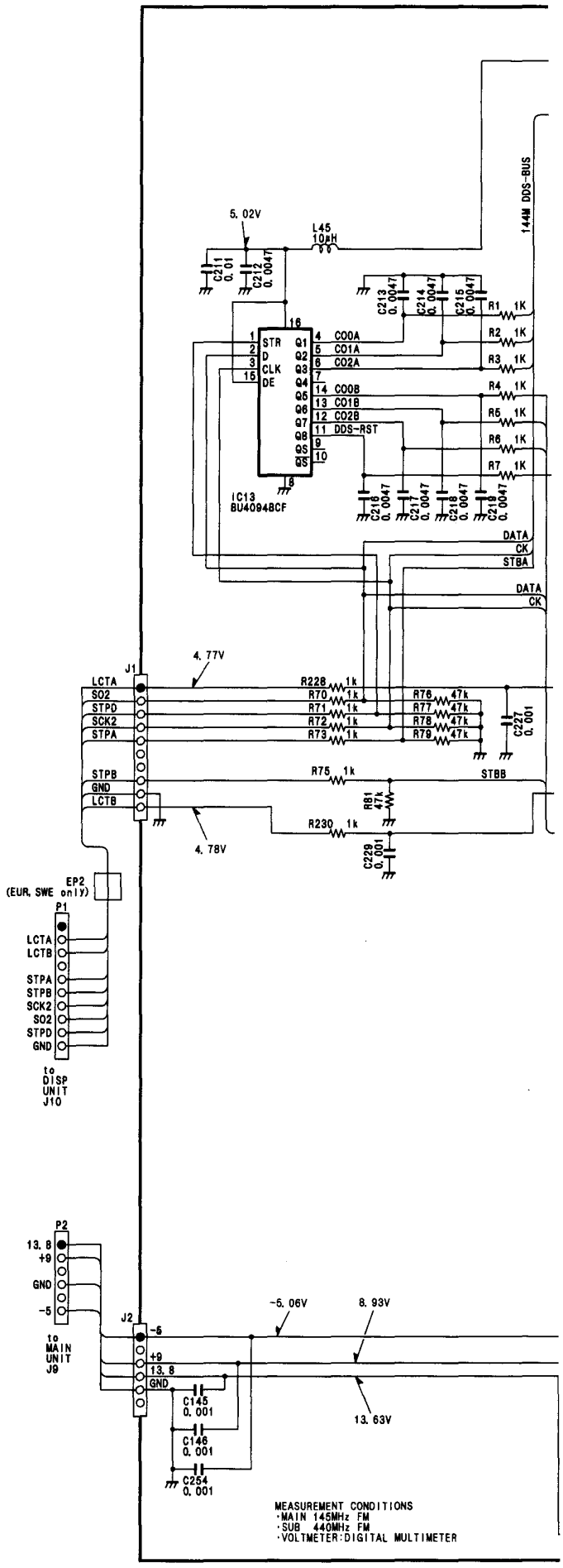

Downloaded from www.Manualslib.com manuals search engine

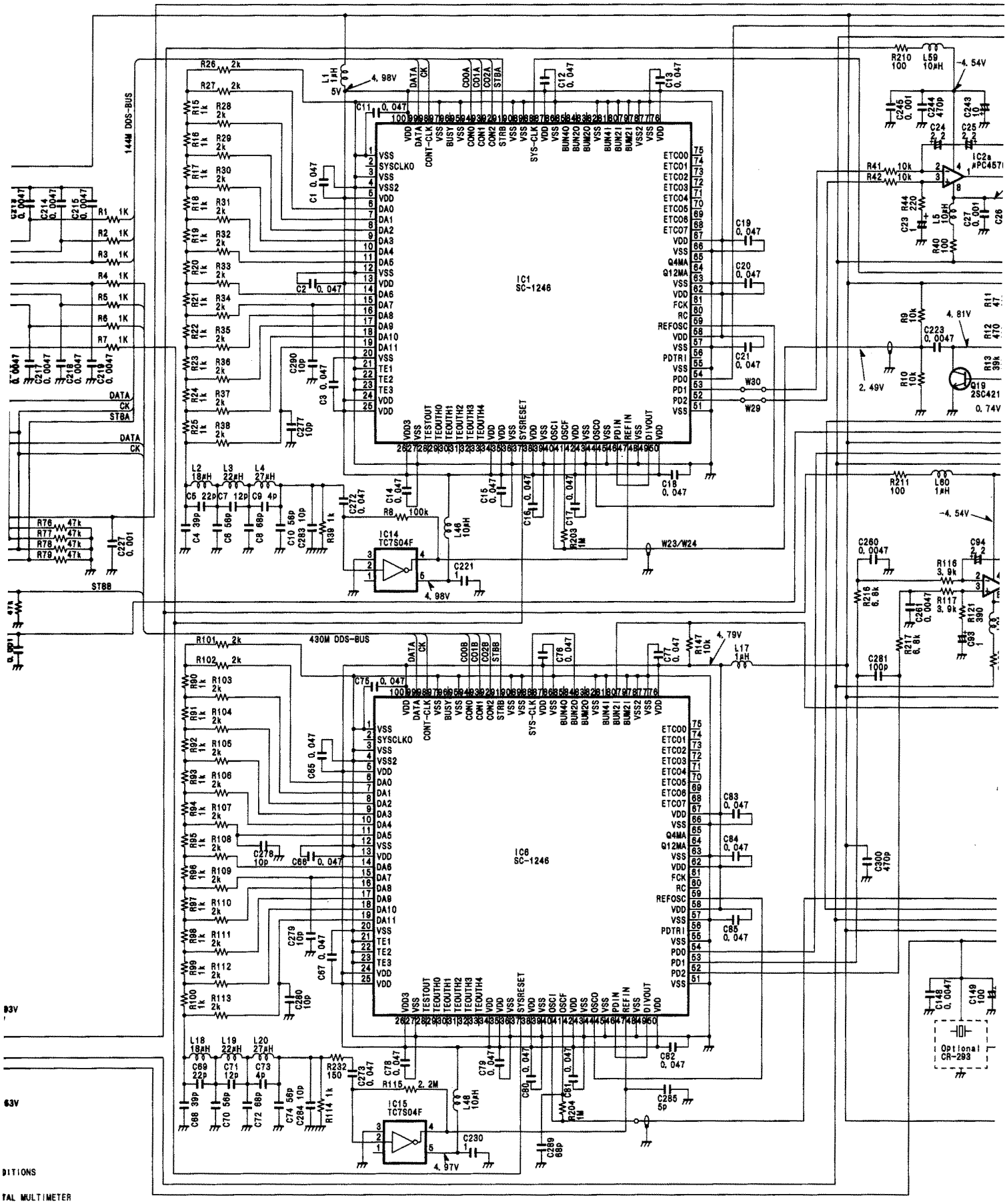

Downloaded from www.Manualslib.com manuals search engine

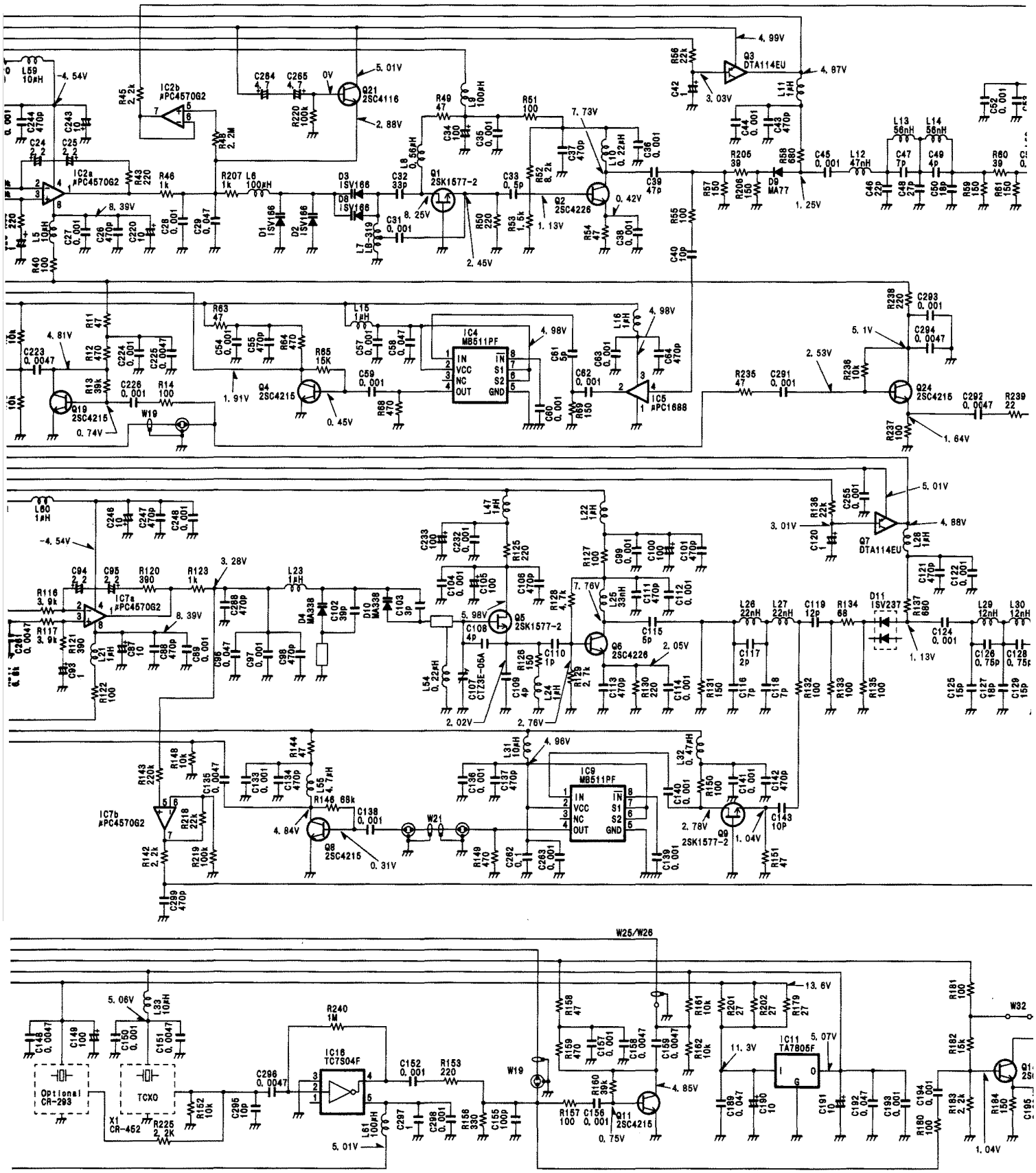

Downloaded from www.Manualslib.com manuals search engine

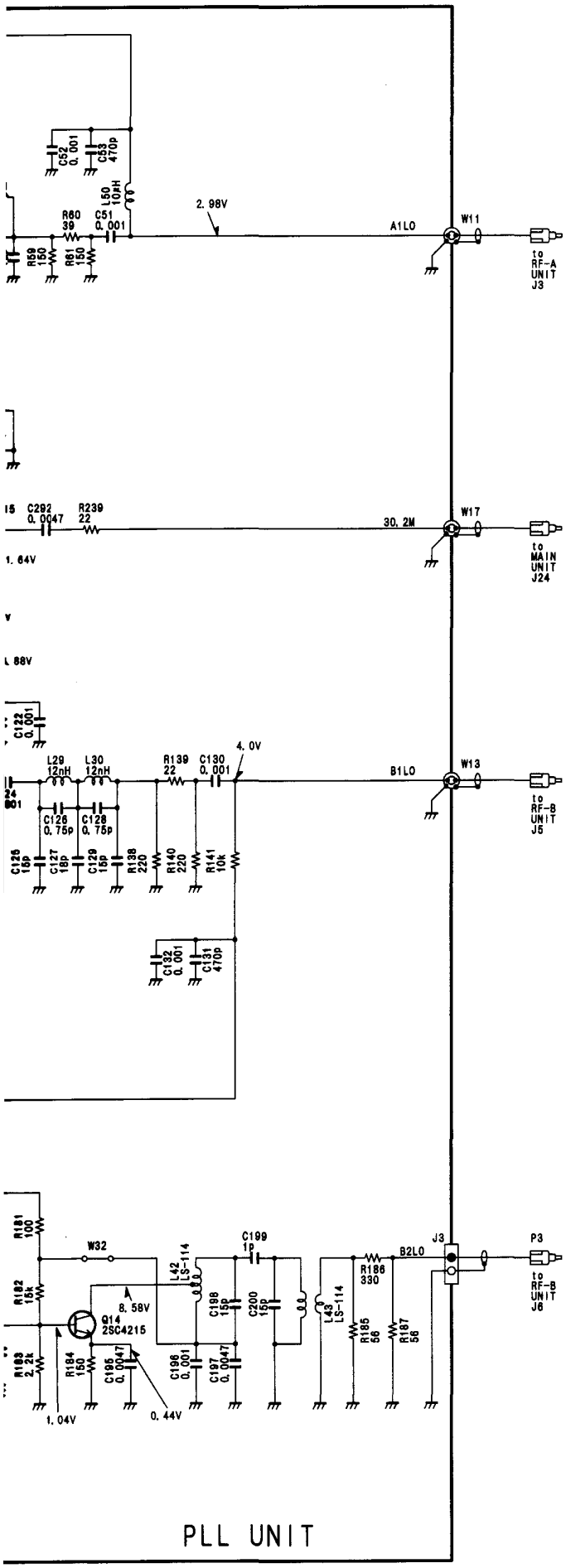

Downloaded from www.Manualslib.com manuals search engine

Icom Inc.

6-9-16, Kamihigashi, Hirano-ku, Osaka 547, Japan
Phone: 06 793 5302
Fax : 06 793 0013

Icom America Inc.

<Corporate Headquarters>
2380 116th Avenue N.E., Bellevue, WA 98004, U.S.A.
Phone : (206) 454-8155
Fax : (206) 454-1509
Telex : 152210 ICOM AMER BVUE

<Customer Service>
Phone : (206) 454-7619

<Regional Customer Service Center>
18102 Sky Park South, Suite 52-B, Irvine, CA 92714, U.S.A.
Phone : (714) 852-8026
Fax : (714) 852-8716

Icom Canada

A Division of Icom America Inc.
3071 #5 Road, Unit 9, Richmond, B.C., V6X 2T4, Canada
Phone : (604) 273-7400
Fax : (604) 273-1900

Icom (Europe) GmbH

Communication Equipment
Himmelgeister Str. 100, D-40225 Düsseldorf, Germany
Phone : 0211 346047
Fax : 0211 333639

Icom (Australia) Pty. Ltd.

A.C.N 006 092 575
7 Duke Street, Windsor, Victoria, 3181, Australia
Phone : 03 9529 7582
Fax : 03 9529 8485

Icom (UK) Ltd.

Unit 9, Sea St., Herne Bay, Kent, CT6 8LD, U.K.
Phone : 01227 741741
Fax : 01227 741742
Telex : 965179 ICOM G

Icom France S.a

Zac de la Plaine, Rue Brindejonc des Moulinais
BP 5804, 31505 Toulouse Cedex, France
Phone : 61. 36. 03. 03
Fax : 61. 36. 03. 00
Telex : 521515 ICOM FRA

Downloaded from www.Manualslib.com manuals search engine

Count on us!

Icom Inc.
6-9-16, Kamihigashi, Hirano-ku, Osaka 547, Japan

A-5393KG-S
Printed in Singapore
Copyright © 1996 by Icom Inc.

Downloaded from www.Manualslib.com manuals search engine