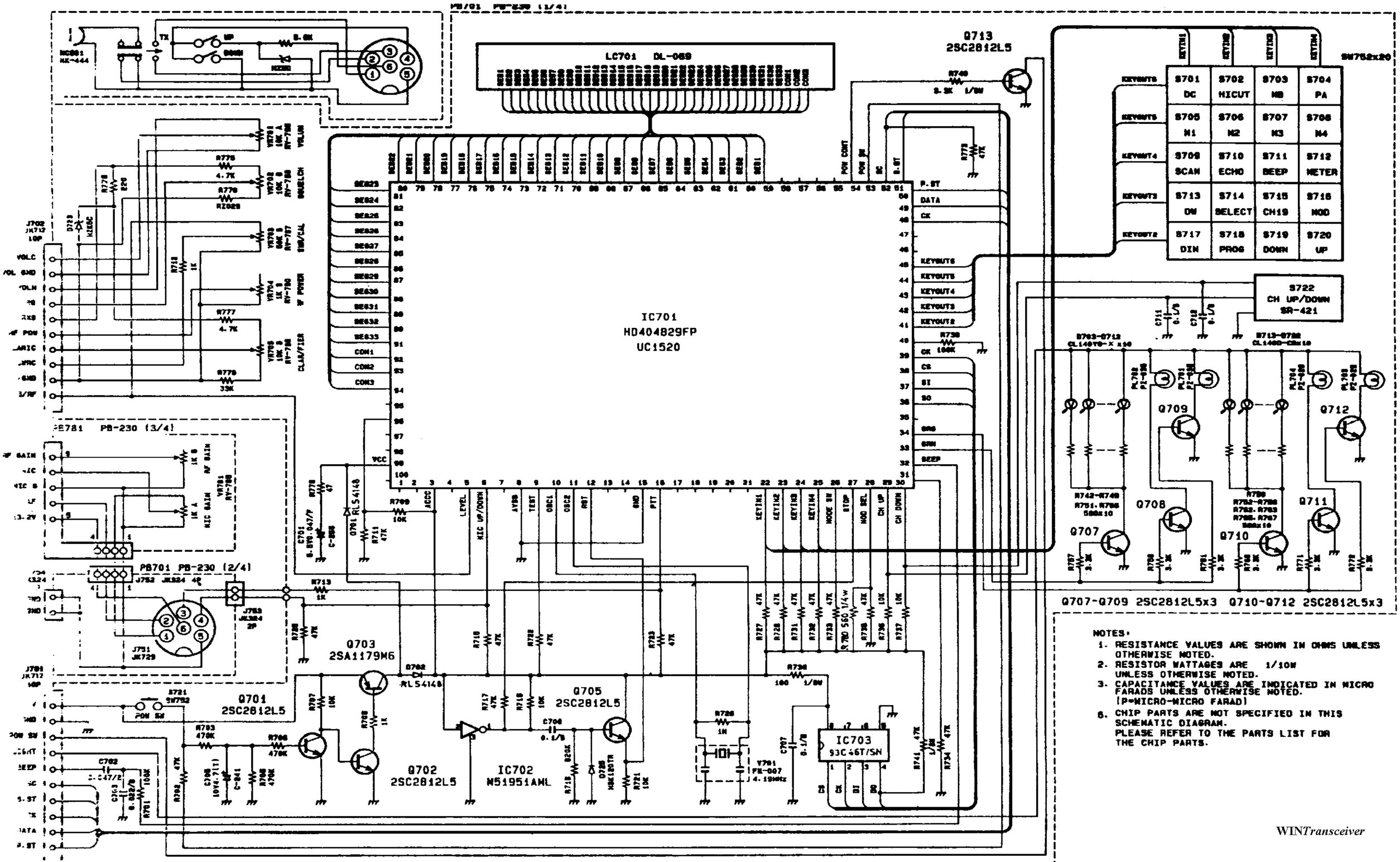

NOTES:

1. RESISTANCE VALUES ARE SHOWN IN OHMS UNLESS OTHERWISE NOTED.
2. RESISTOR WATTAGES ARE 1/10W UNLESS OTHERWISE NOTED.
3. CAPACITANCE VALUES ARE INDICATED IN MICRO FARADS UNLESS OTHERWISE NOTED. (P=MICRO-MICRO FARAD)
6. CHIP PARTS ARE NOT SPECIFIED IN THIS SCHEMATIC DIAGRAM. PLEASE REFER TO THE PARTS LIST FOR THE CHIP PARTS.

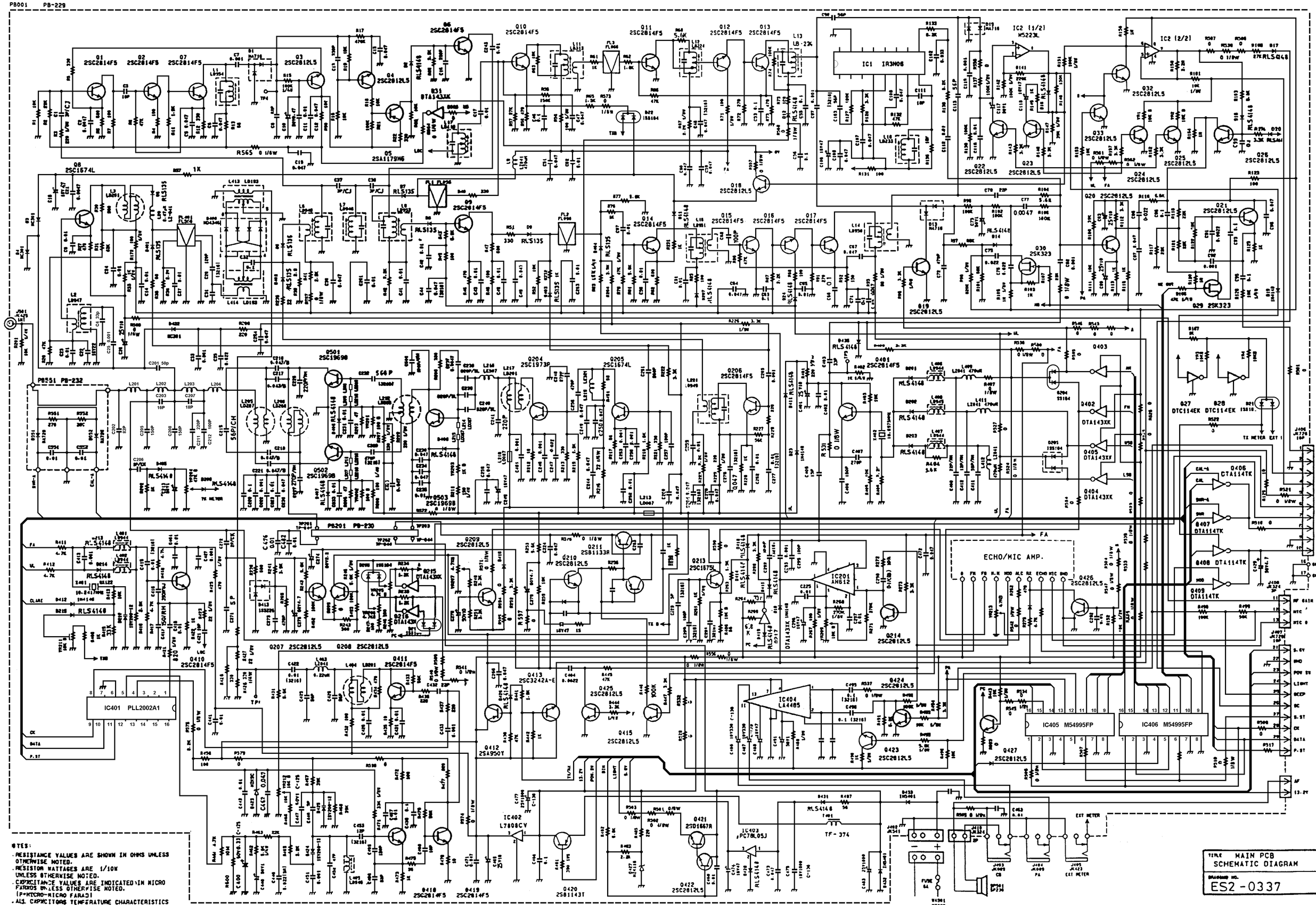

NOTES:

- RESISTANCE VALUES ARE SHOWN IN OHMS UNLESS OTHERWISE NOTED.
- RESISTOR WATTAGES ARE 1/10W UNLESS OTHERWISE NOTED.
- CAPACITANCE VALUES ARE INDICATED IN MICRO FARADS UNLESS OTHERWISE NOTED. (P=MICRO-MICRO FARAD)
- ALL CAPACITORS TEMPERATURE CHARACTERISTICS ARE CG (LESS THAN 1000 PF) OR B (MORE THAN 1000 PF) UNLESS OTHERWISE NOTED

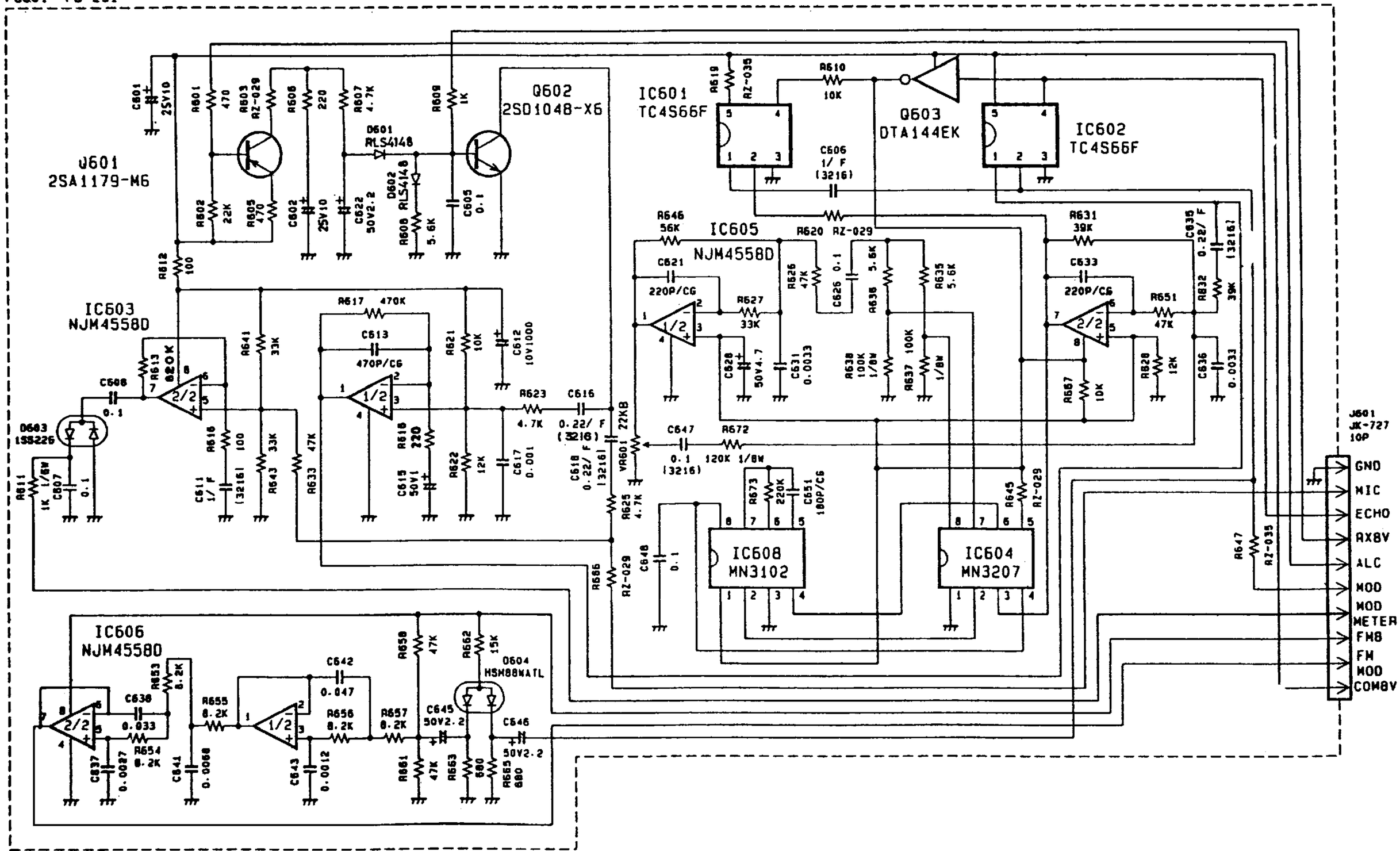
Q601
2SA1179-M6
Q602
2SD1048-X6
Q603
DTA144EK
IC601
TC4S66F
IC602
TC4S66F
IC603
NJM4558D
IC605
NJM4558D
IC606
NJM45580
IC608
MN3102
IC604
MN3207
D601
RLS4148
D602
RLS4148
D603
1SS226
D604
HSM88WATL
J601
JK-727
10P
GND
MIC
ECHO
RX8V
ALC
MOD
MOD
METER
FM8
FM
MOD
COM8V

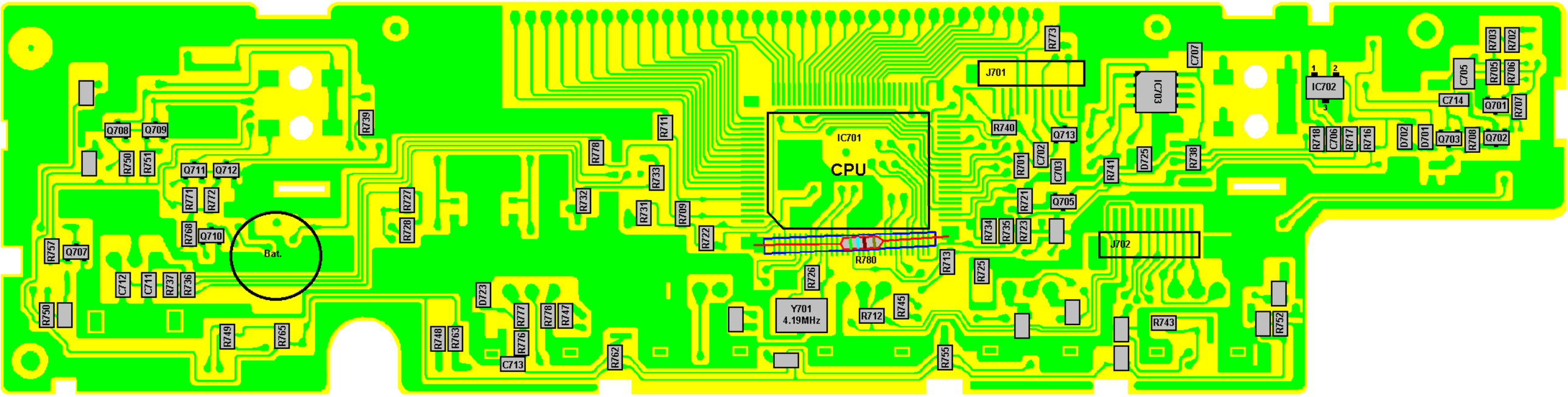
IC701
CPU
J701
IC703
IC702
J702
Y701
4.19MHz
Bat.
R780
Q708
Q709
R750
R751
Q711
Q712
R771
R772
R768
Q710
R757
Q707
C712
C711
R737
R736
R750
R749
R765
R739
R727
R728
R778
R732
R711
R733
R731
R709
R722
D723
R748
R763
R777
R776
C713
R778
R747
R762
R726
R712
R745
R755
R713
R725
R743
R752
R73
R740
Q713
R701
C702
C703
R721
Q705
R734
R735
R723
R741
D725
R738
C707
R718
C706
R717
R716
D702
D701
Q703
R708
Q702
C714
Q701
R707
C705
R705
R706
R703
R702

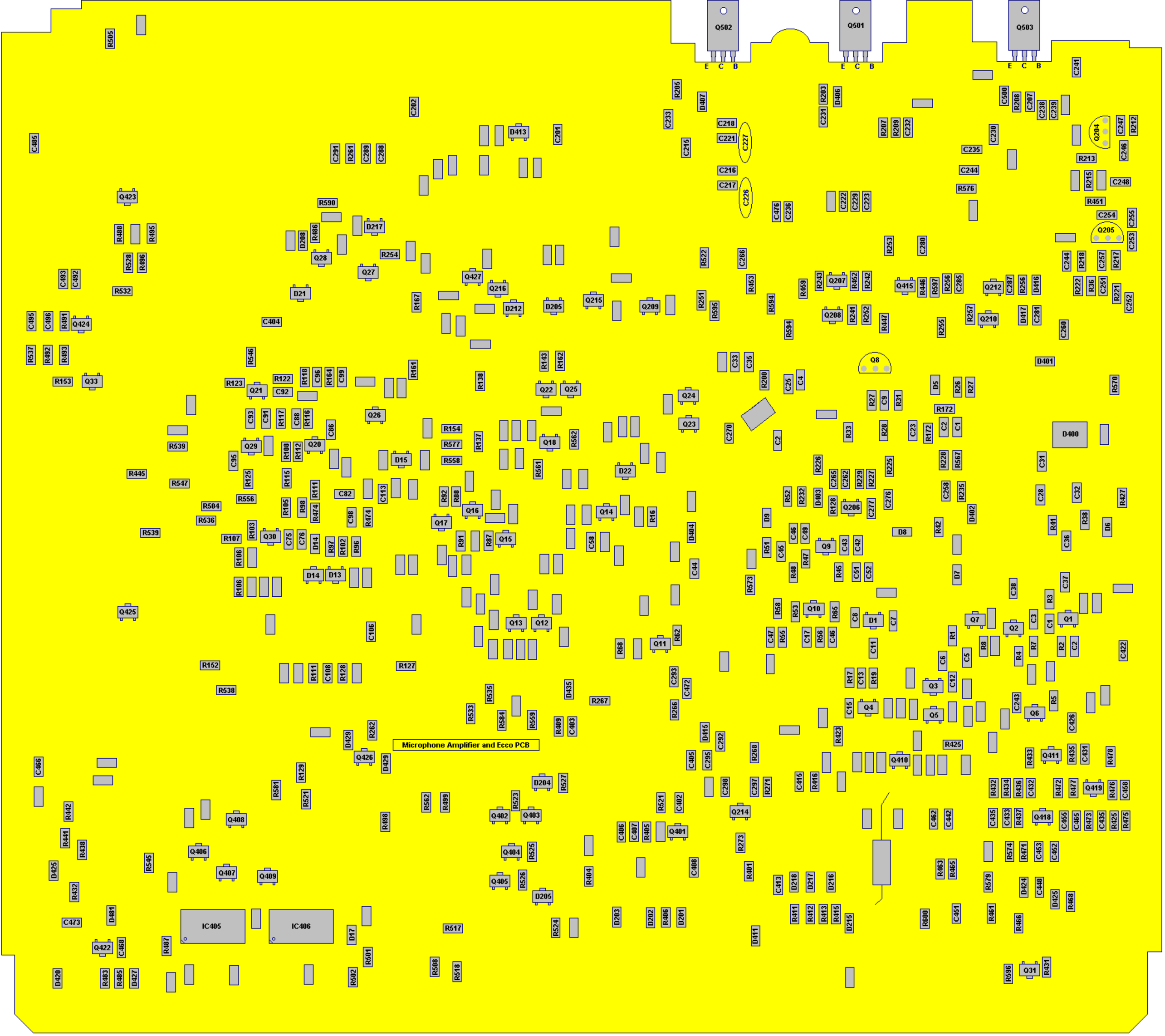
Q502
Q501
Q503
E C B
E C B
E C B
Microphone Amplifier and Ecco PCB
IC405
IC406
D400
D401
Q8
Q204
Q205
C227
C226

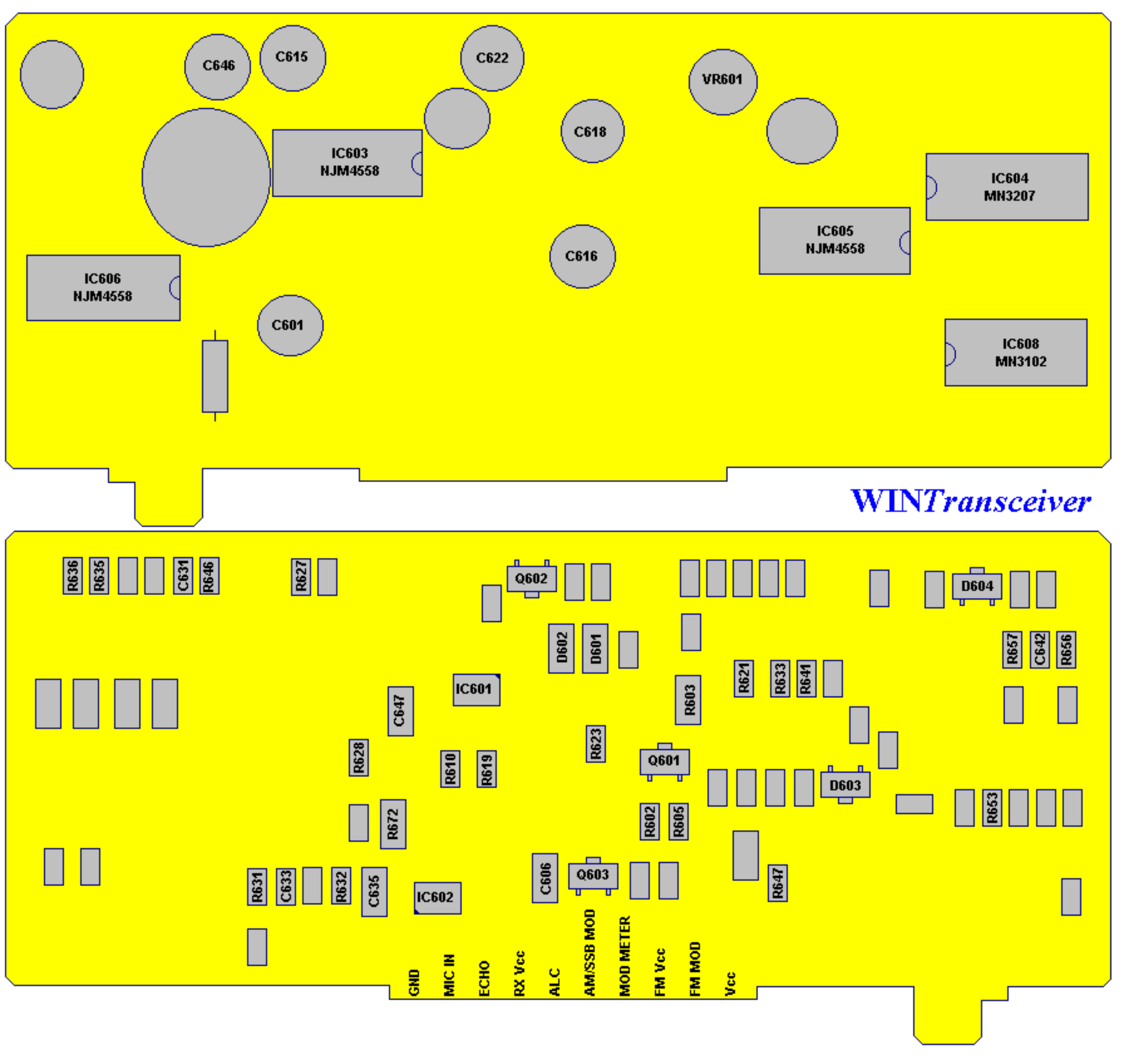
C646
C615
C622
VR601
C618
IC603
NJM4558
IC604
MN3207
IC605
NJM4558
C616
IC606
NJM4558
C601
IC608
MN3102
WINTransceiver
R636
R635
C631
R646
R627
Q602
D604
D602
D601
R657
C642
R656
IC601
R603
R621
R633
R641
C647
R623
R628
R610
R619
Q601
D603
R672
R602
R605
R653
R631
C633
R632
C635
IC602
C606
Q603
R647
GND
MIC IN
ECHO
RX Vcc
ALC
AM/SSB MOD
MOD METER
FM Vcc
FM MOD
Vcc