PRESIDENT

TOMMY

SERVICE MANUAL

-TECNNICAL CHARACTERITICS

TOMMY (config: E d EU PL)

1-GENERAL:

-Multiconfiguration(E,d,EU,PL)
-E ⇒ 40 channels AM 4W (from 26,965Mhz to 27,405Mhz)
-d ⇒ 40 channels AM 1W (from 26,965Mhz to 27,405Mhz)
-EU ⇒ 40 channels AM 1W (from 26,965Mhz to 27,405Mhz)
-PL ⇒ 40 channels AM 4W (from 26,960Mhz to 27,400Mhz)
-Channel step
-10KHz
-Class of emission
-AM(A3E)
-Power supply
-13,2V (from10,8V to 15,6V)
-Antenna impedance
-50Ω
-Dimensions(in mm)
-125(L)x45(H)x150(D)
-Weight
-0,7Kg

2-TRANSMISSION:

-Frequency allowance
-±200Hz
-Transmission interference
-Inferior to 4nW(-54dBm)
-Audio frequency response
-From 300Hz to 3kHz in AM
-Emitted power in the adjacent channel
-Inferior to 20µW
-Microphone sensitivity
-Inferior to 10mV
-Current drain
-1,7A(in transmission mode with modulation)
-Modulated signal distortion
-Inferior to 2%

3-RECEPTION:

-Maximum sensitivity at 20dB sinad
-0,5µV(-113dBm) AM
-Audio frequency response
-From 300Hz to 3kHz in AM
-Adjacent channel selectivity
-Superior to 60dB
-Frequency image rejection
-Superior to 60dB
-Intermodulation response
-Superior to 54dB
-Maximum audio power
-3W
-Squelch sensitivity
-Threshold 0,2µV(-120dBm)/Tight 1mV(-47dBm)
-Current drain
-300mA nominal/750mA maximum

ALIGNMENT PROCEDURE
(TOMMY)

* VCO/PLL PORTION

- Alignment procedure
- Test points
- Frequencies chart

* TRANSMITTER

- Alignment procedure
- Test points

* RECEIVER

- Alignment procedure
- Test points

Test equipement required

Frequency counter 200 Mhz	HF Generator
DC Volmeter	BF Volmeter
Distortiometer	HF Volmeter
Wattmeter - Dummy load	Osilloscope
FM linear detector	Load 8 Ω
AF generator	Sinad meter

Conditions of Measurements on HF Generator

Reception
AM mode: Level - 107 dBm Frequency 1 KHz with 60% of modulation.

Transmission
Frequency1 KHz 30mV.

ALIGNMENT VCO/PLL

1 - Alignment procedure(13,2V;configuration”EU,E”)

STEP	CONDITION	ADJUSTMENT	REMARKS OF ADJUSTMENT
1	AM(EU,E) RX mode Channel 20	CT301	Connect a frequency counter to TP200,and adjust CT301 to reach 37,900MHz.
2	AM(EU,E) TX/RX mode Channel 40		Connect a voltmeter to TP 103,and check: 2,2V±0,1V ≤Tx Channel 40≤3,2V±0,1V 2,5V±0,1V ≤Rx Channel 40≤3,5V±0,1V
3	AM(EU,E) TX/RX mode Channel 1		Connect a voltmeter to TP 103,and check: Tx Channel 1=Tx Channel 40-0,3V±0,1V Rx Channel 1=Rx Channel 40-0,3V±0,1V
4	AM(EU,E) TX/RX mode Channel 1 to 40		Connect a frequency counter to TP200,and check frequencies.

ALIGNEMENT VCO/PLL

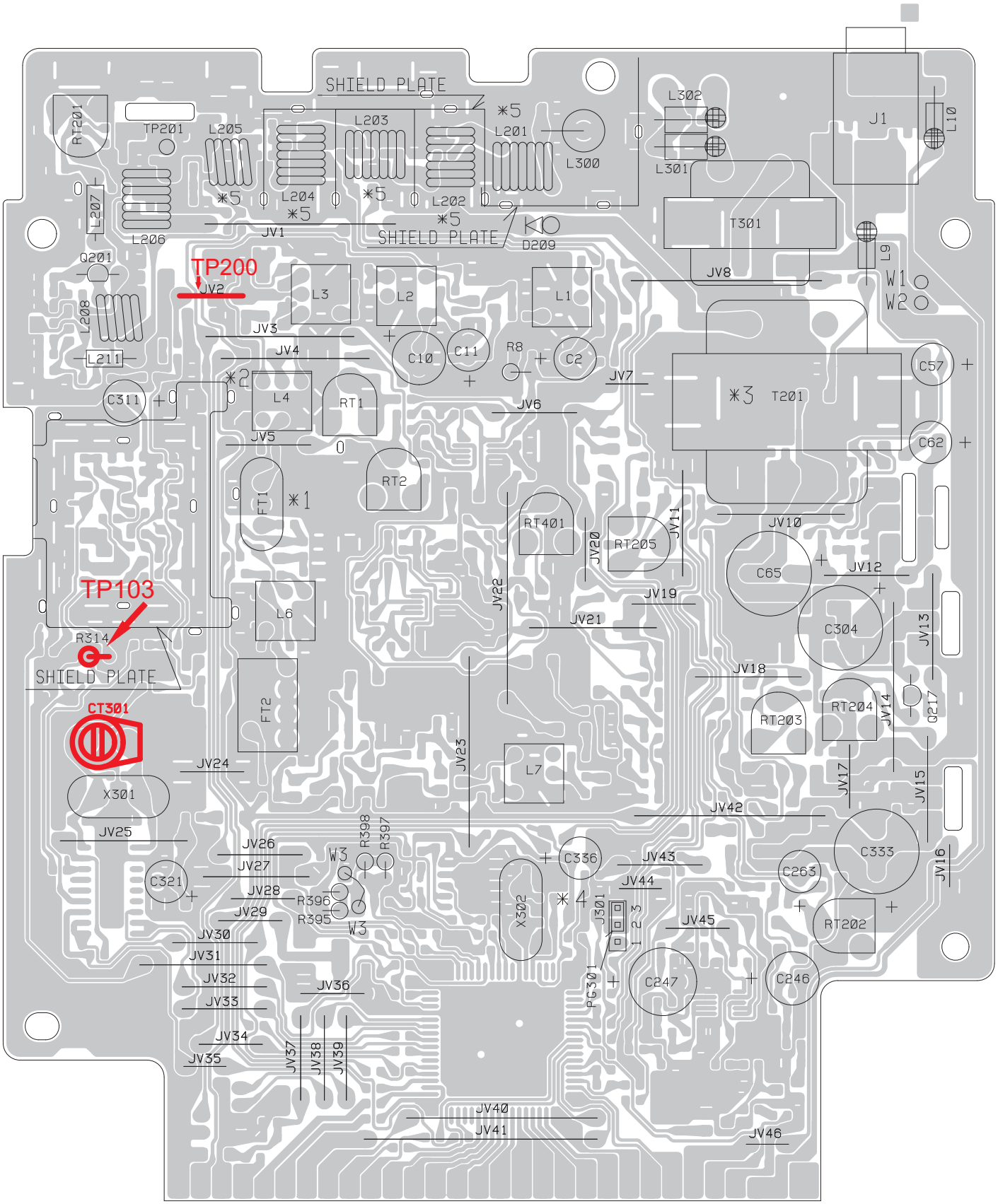

- FREQUENCY LIST (EU,E,d)

CH	Channels Frequencies (MHz)	VCO Frequencies (MHz)
1	26,965	37,660
2	26,975	37,670
3	26,985	37,680
4	27,005	37,700
5	27,015	37,710
6	27,025	37,720
7	27,035	37,730
8	27,055	37,750
9	27,065	37,760
10	27,075	37,770
11	27,085	37,780
12	27,105	37,800
13	27,115	37,810
14	27,125	37,820
15	27,135	37,830
16	27,155	37,850
17	27,165	37,860
18	27,175	37,870
19	27,185	37,880
20	27,205	37,900
21	27,215	37,910
22	27,225	37,930
23	27,255	37,950
24	27,235	37,930
25	27,245	37,940
26	27,265	37,960
27	27,275	37,970
28	27,285	37,980
29	27,295	37,990
30	27,305	38,000
31	27,315	38,010
32	27,325	38,020
33	27,335	38,030
34	27,345	38,040
35	27,355	38,050
36	27,365	38,060
37	27,375	38,070
38	27,385	38,080
39	27,395	38,090
40	27,405	38,100

- FREQUENCY LIST (PL)

CH	Channels Frequencies (MHz)	VCO Frequencies (MHz)
1	26,960	37,655
2	26,970	37,665
3	26,980	37,675
4	27,000	37,695
5	27,010	37,705
6	27,020	37,715
7	27,030	37,725
8	27,050	37,745
9	27,060	37,755
10	27,070	37,765
11	27,080	37,775
12	27,100	37,795
13	27,110	37,805
14	27,120	37,815
15	27,130	37,825
16	27,150	37,845
17	27,160	37,855
18	27,170	37,865
19	27,180	37,875
20	27,200	37,895
21	27,210	37,905
22	27,220	37,915
23	27,250	37,945
24	27,230	37,925
25	27,240	37,935
26	27,260	37,955
27	27,270	37,965
28	27,280	37,975
29	27,290	37,985
30	27,300	37,995
31	27,310	38,005
32	27,320	38,015
33	27,330	38,025
34	27,340	38,035
35	27,350	38,045
36	27,360	38,055
37	27,370	38,065
38	27,380	38,075
39	27,390	38,085
40	27,400	38,095

ALIGNMENT TRANSMITTER

1 - Alignment procedure(13,2V;configuration”EU,E”)

STEP	CONDITION	ADJUSTMENT	REMARKS OF ADJUSTMENT
1	AM(E)TX Channel 20	RT201	Connect a dummy load to jack antenna, adjust RT201 to reach 5V±0,2V on the DC voltmeter connected to TP102.
2	AM(EU)TX Channel 20	RT203	Connect a wattmeter to jack antenna, adjust RT203 to reach 1W on the wattmeter.
3	AM(E)TX Channel 20	RT204	Connect a wattmeter to jack antenna, adjust RT204 to reach 4W on the wattmeter.
4	Same as 2		Connect a dummy load to jack antenna. Check that the “RF meter” display S1
5	Same as 3		Connect a dummy load to jack antenna. Check that the “RF meter” display S9
6	AM(E)TX Mod 30 mV 1 KHz CH 20	RT202/RT205	First: Adjust RT202 and RT205 to the maximum of modulation, then adjust RT205 to reach ±90% of modulation, then adjust RT202 to reach ± 85% of modulation.

ALIGNMENT TRANSMITTER

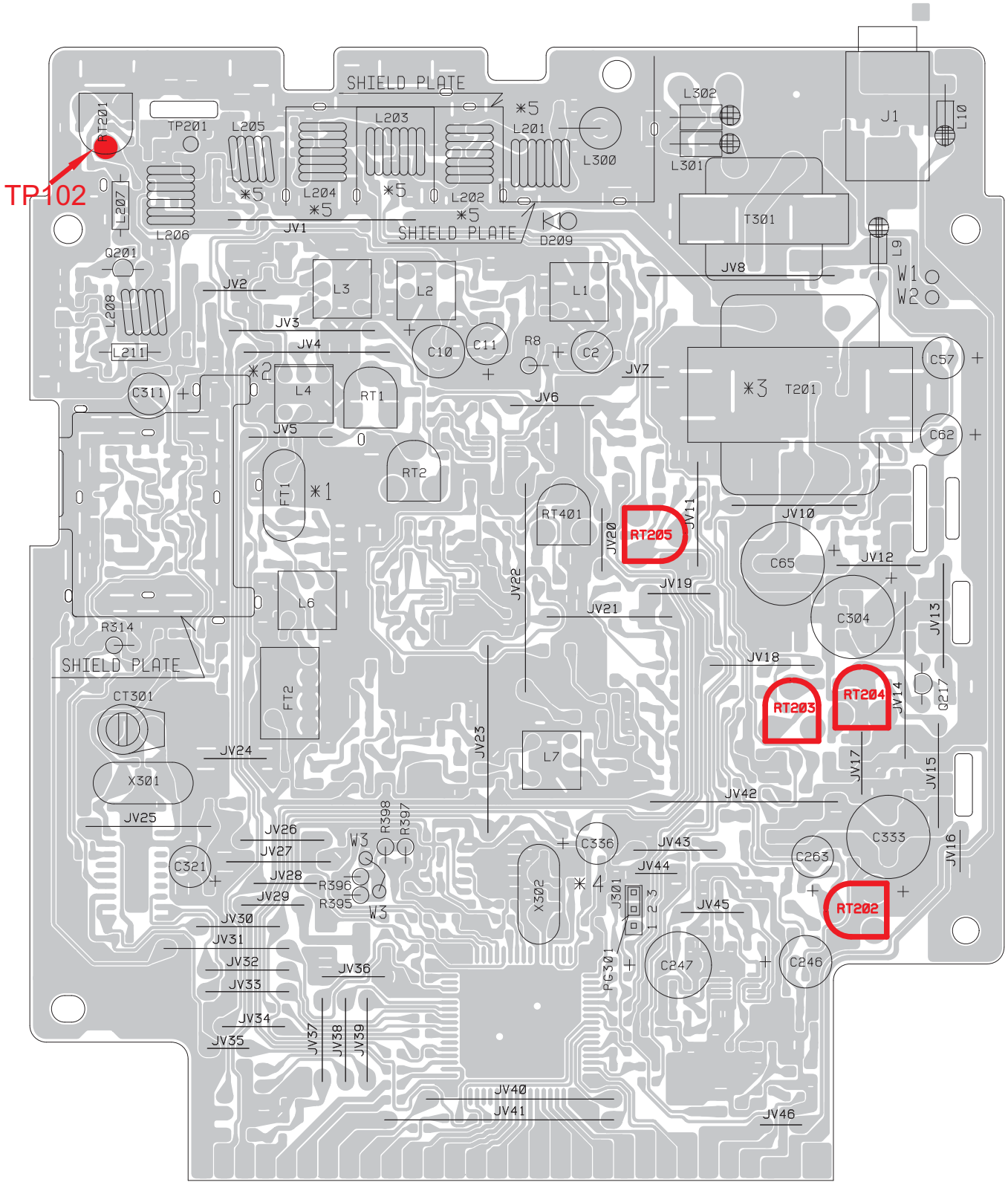

ALIGNMENT RECEIVER

1 - Alignment procedure(13,2V;configuration”EU,E”)

STEP	CONDITION	ADJUSTMENT	REMARKS OF ADJUSTMENT
1	AM(EU,E) Channel 20 Middle volume level. No squelch active	L1-L2-L3 L4-L6-L7	Connect HF generator to jack antenna adjusted at (–107dBm 1KHz 60%), connect sinad meter to jack EXT speaker and adjust coils for maximum sensitivity(≥ 20dB sinad).
2	AM(EU,E) Channel 20 Middle volume level No squelch active	RT1(S-METER)	Connect HF generator to jack antenna adjusted at (–67dBm 1KHz 60%) and adjust RT1 so that the “S meter” display S9.
3	AM(EU,E) Channel 20 Middle volume level Squelch maximum clockwise	RT2(SQ)	Connect HF generator to jack antenna adjusted at (–47dBm 1KHz 60%) and adjust RT2 so that the signal is audible .
4	AM(EU,E) Channel 20 Middle volume level Squelch maximum counterclockwise (ASC)	RT401(ASC)	Connect HF generator to jack antenna. Connect sinad meter to jack EXT speaker, adjust the ouput level of HF generator and check that the opening ASC sinad is 20dB±2dB.If not adjust RT401.

ALIGNMENT RECEIVER

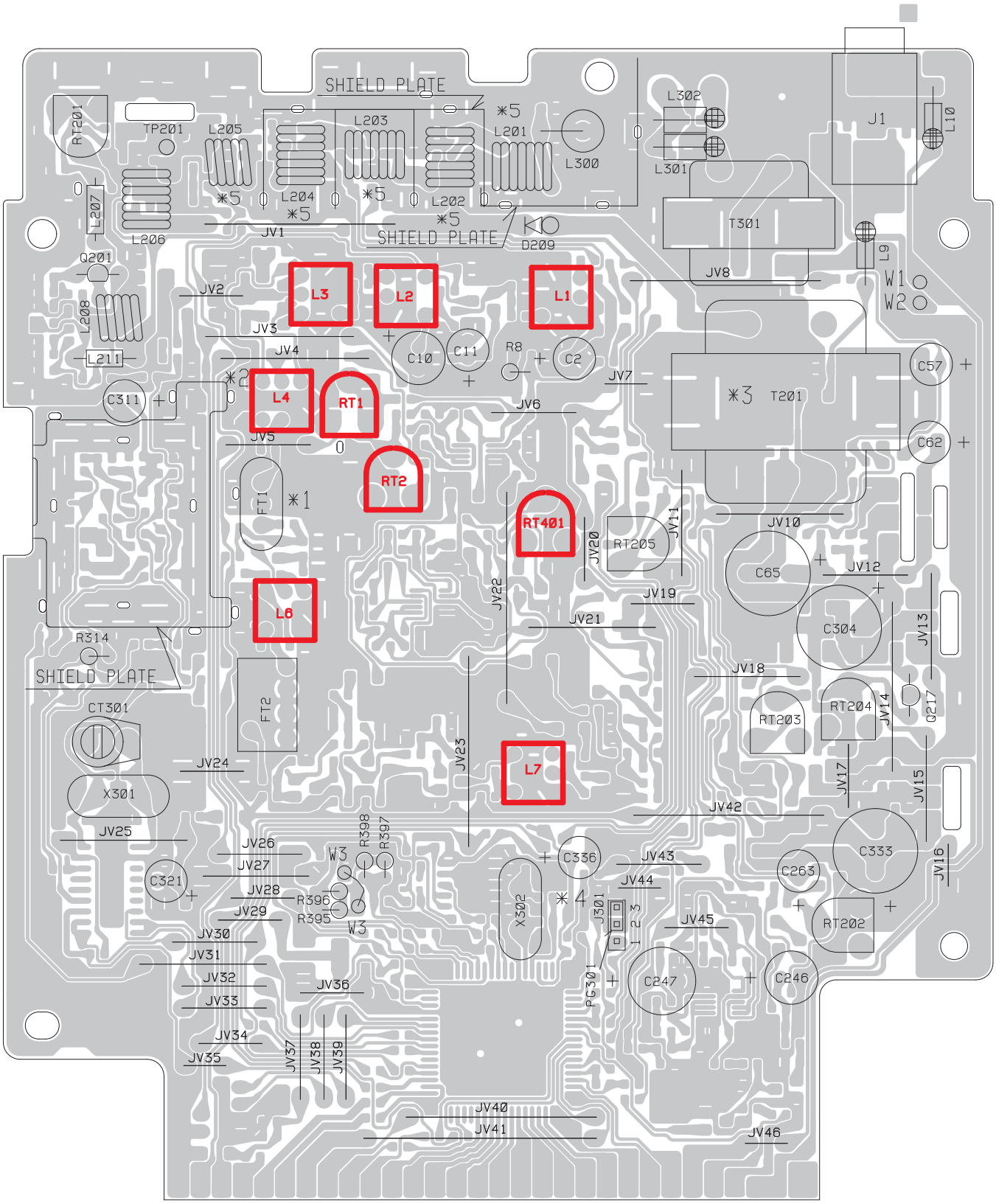

TOMMY

BLOC DIAGRAM

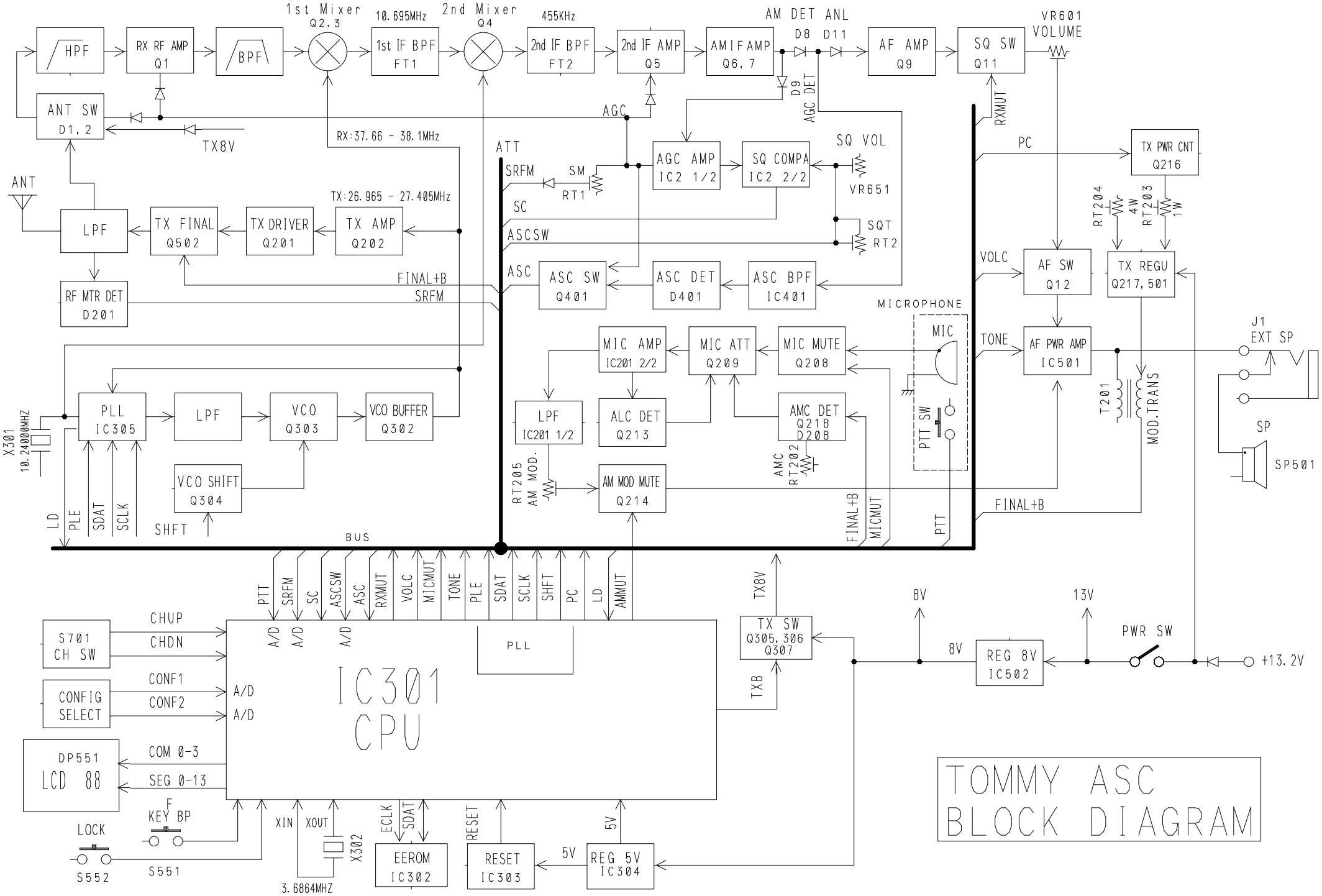
HPF
RX RF AMP Q1
BPF
1st Mixer Q2, 3
10.695MHz
1st IF BPF FT1
2nd Mixer Q4
455KHz
2nd IF BPF FT2
2nd IF AMP Q5
AM IF AMP Q6, 7
AM DET ANL
D8
D11
D9
AGC DET
AF AMP Q9
SQ SW Q11
VR601 VOLUME
ANT SW D1, 2
TX8V
AGC
RX:37.66 - 38.1MHz
ATT
SRFM
SM
RT1
AGC AMP IC2 1/2
SQ COMPA IC2 2/2
SQ VOL
VR651
SQT
RT2
SC
ASCSW
ASC
ASC SW Q401
ASC DET D401
ASC BPF IC401
RXMUT
PC
TX PWR CNT Q216
RT204 4W
RT203 1W
ANT
LPF
TX FINAL Q502
TX DRIVER Q201
TX AMP Q202
TX:26.965 - 27.405MHz
FINAL+B
SRFM
RF MTR DET D201
VOLC
AF SW Q12
TX REGU Q217, 501
MICROPHONE
MIC
TONE
AF PWR AMP IC501
J1 EXT SP
MIC AMP IC201 2/2
MIC ATT Q209
MIC MUTE Q208
LPF IC201 1/2
ALC DET Q213
AMC DET Q218 D208
AMC RT202
PTT SW
T201
MOD.TRANS
SP
SP501
X301 10.24000MHZ
PLL IC305
LPF
VCO Q303
VCO BUFFER Q302
VCO SHIFT Q304
SHFT
RT205 AM MOD.
AM MOD MUTE Q214
LD
PLE
SDAT
SCLK
BUS
FINAL+B
MICMUT
PTT
PTT
SRFM
SC
ASCSW
ASC
RXMUT
VOLC
MICMUT
TONE
PLE
SDAT
SCLK
SHFT
PC
LD
AMMUT
TX8V
TX SW Q305, 306 Q307
TXB
8V
13V
PWR SW
8V
REG 8V IC502
+13.2V
S701 CH SW
CHUP
CHDN
CONFIG SELECT
CONF1
CONF2
A/D
PLL
IC301 CPU
DP551 LCD 88
COM 0-3
SEG 0-13
LOCK
KEY BP
S552
S551
XIN
XOUT
X302
3.6864MHZ
ECLK
SDAT
EEROM IC302
RESET
RESET IC303
5V
REG 5V IC304
TOMMY ASC
BLOCK DIAGRAM

TOMMY

SCHEMATIC DIAGRAM

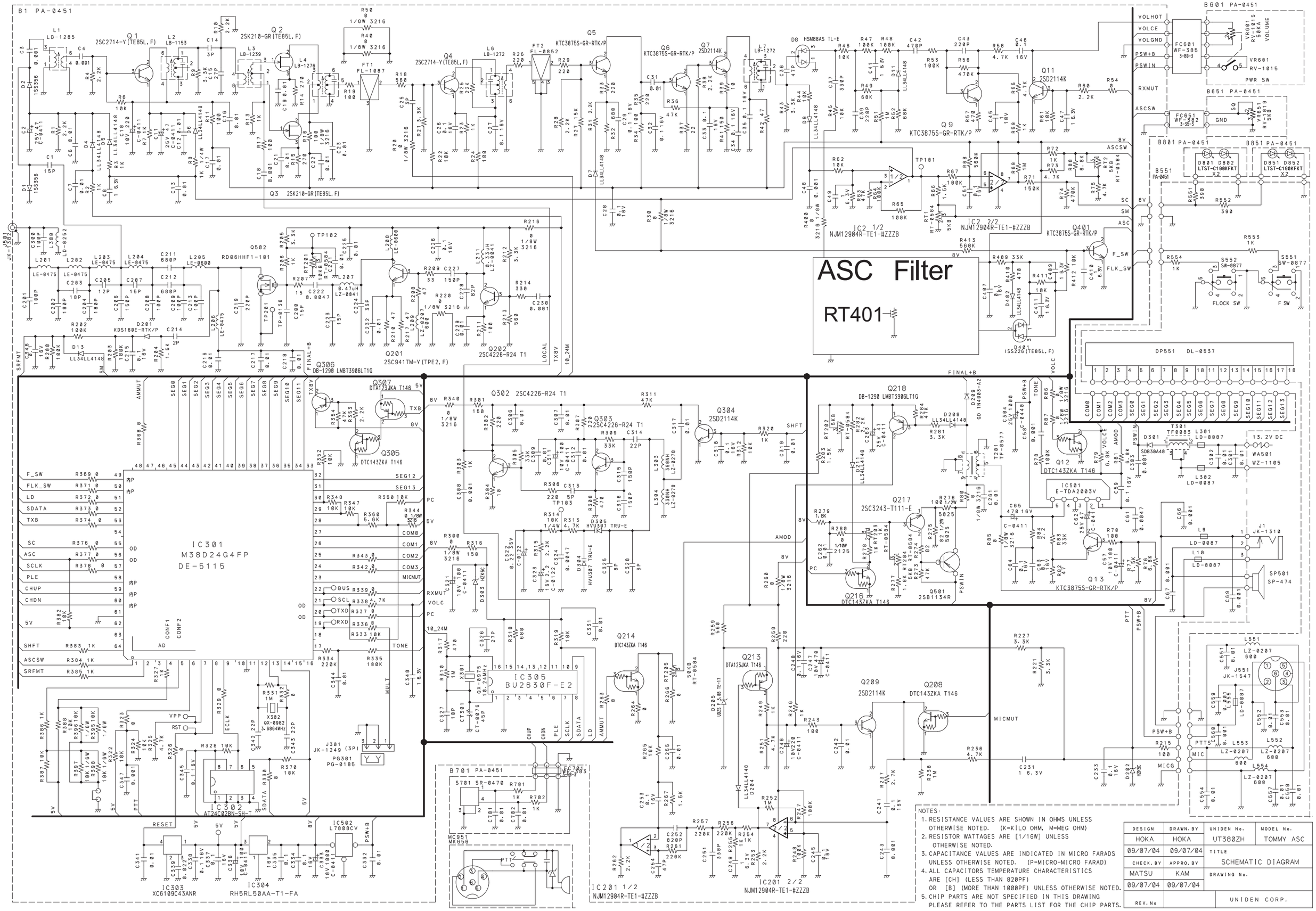

NOTES:

1. RESISTANCE VALUES ARE SHOWN IN OHMS UNLESS OTHERWISE NOTED. (K=KILO OHM, M=MEG OHM)
2. RESISTOR WATTAGES ARE [1/16W] UNLESS OTHERWISE NOTED.
3. CAPACITANCE VALUES ARE INDICATED IN MICRO FARADS UNLESS OTHERWISE NOTED. (P=MICRO-MICRO FARAD)
4. ALL CAPACITORS TEMPERATURE CHARACTERISTICS ARE [CH] (LESS THAN 820PF) OR [B] (MORE THAN 1000PF) UNLESS OTHERWISE NOTED.
5. CHIP PARTS ARE NOT SPECIFIED IN THIS DRAWING PLEASE REFER TO THE PARTS LIST FOR THE CHIP PARTS.

DESIGN	DRAWN. BY	UNIDEN No.	MODEL No.
HOKA	HOKA	UT380ZH	TOMMY ASC
09/07/04	09/07/04	TITLE	
CHECK. BY	APPRO. BY	SCHEMATIC DIAGRAM	
MATSU	KAM	DRAWING No.	
09/07/04	09/07/04		
REV. No		UNIDEN CORP.	

TOMMY

COMPONENT LAYOUT

USE Pb FREE SOLDER

B1 PA-451AB 1/7(TOP VIEW)

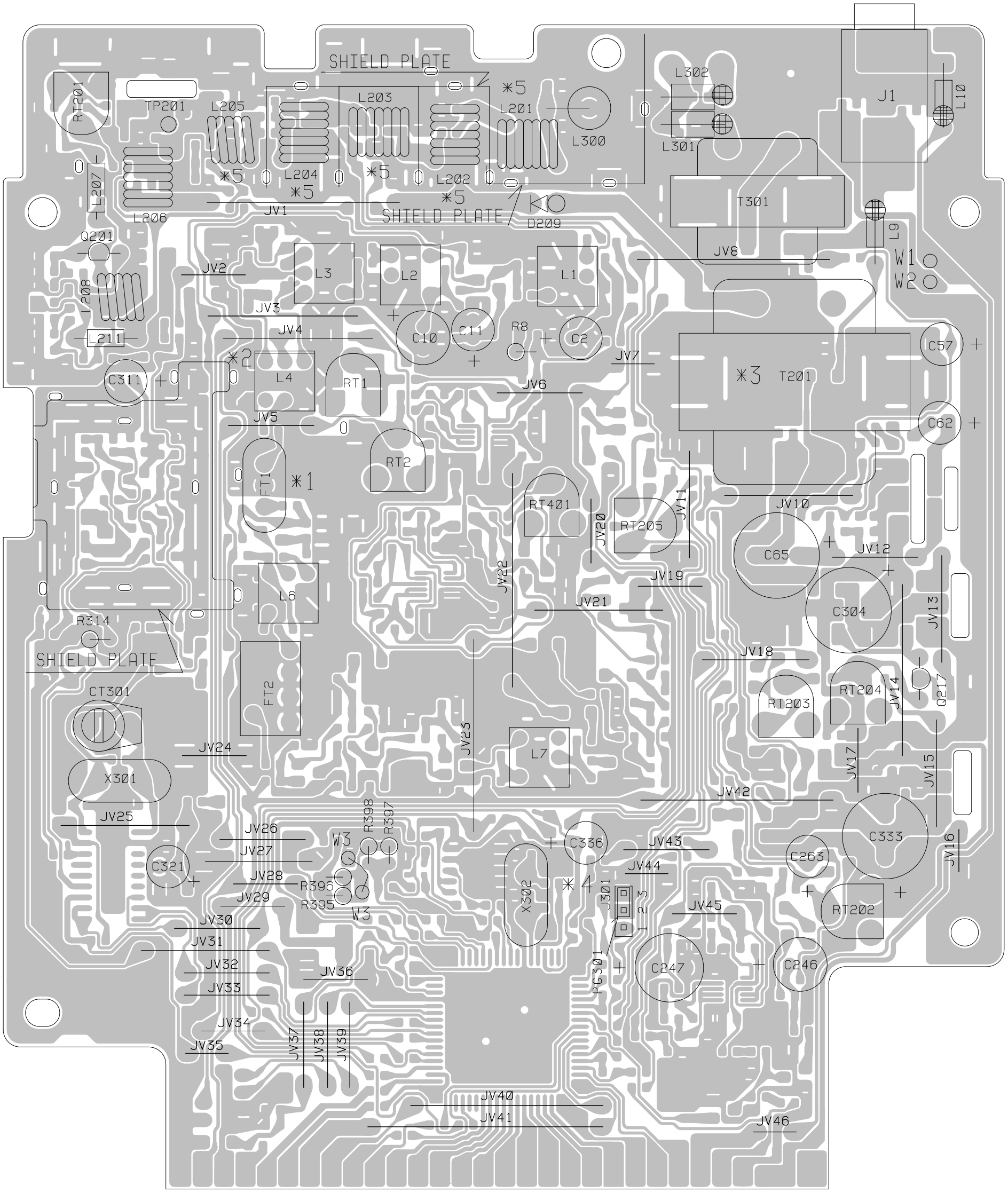

*1 FT1 NO DIRECTION

*2

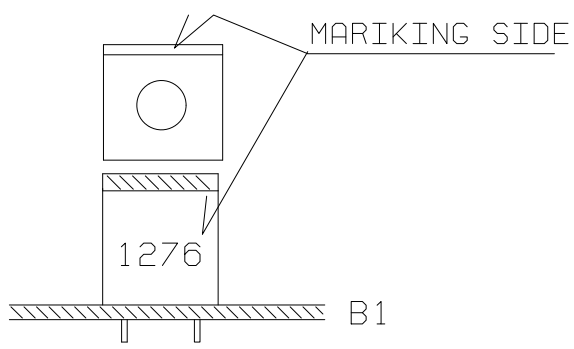

*3

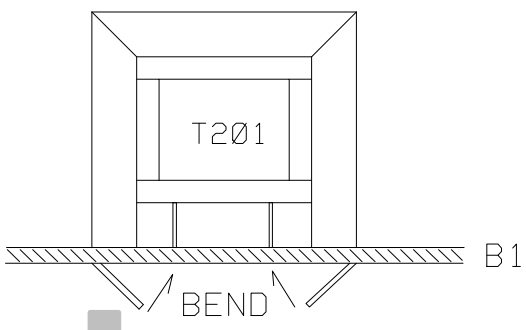

*4

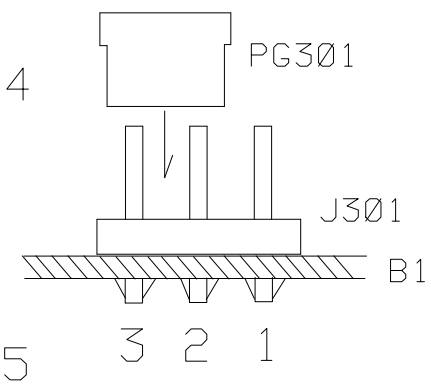

*5

EACH COIL
MUST BE FLAT MOUNT

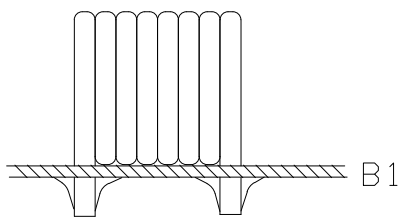

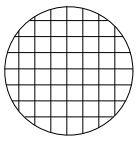

: PUT YELLOW BOND LOCK(SC-121)
(ZABD7001005)

UNIDEN NO.	MODEL NO.
UT380ZH	TOMMY ASC
TITLE MAIN PCB PARTS ASS'Y TOP VIEW	

USE Pb FREE SOLDER

B1 PA-451AB 1/7(BOTTOM VIEW)

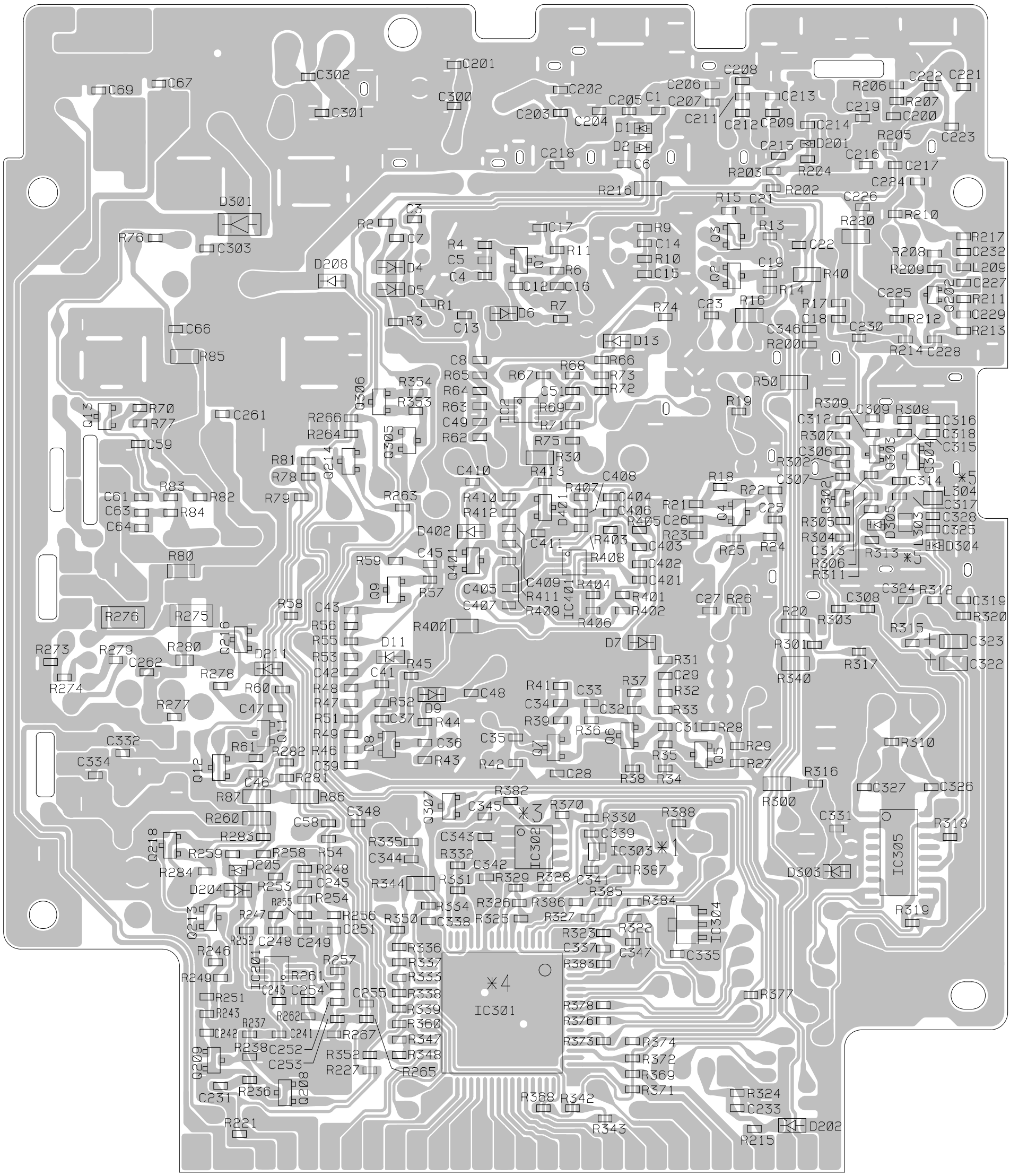

*1 IC303 PIN POSITION

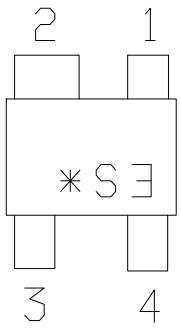

*3 IC302 MARKING & 1 PIN POSITION

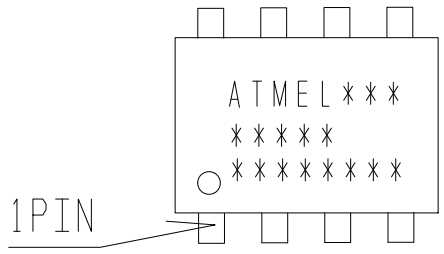

UNIDEN NO.	MODEL NO.
UT380ZH	TOMMY ASC
TITLE MAIN PCB CHIP LAYOUT BOTTOM VIEW	

*2 ALL CHIP INDUCTOR HAS NO DIRECTION

*4 INSTALL IC301 AFTER PROGRAMMING

*5 L303, L304 MANUAL SOLDERING

USE Pb FREE SOLDER

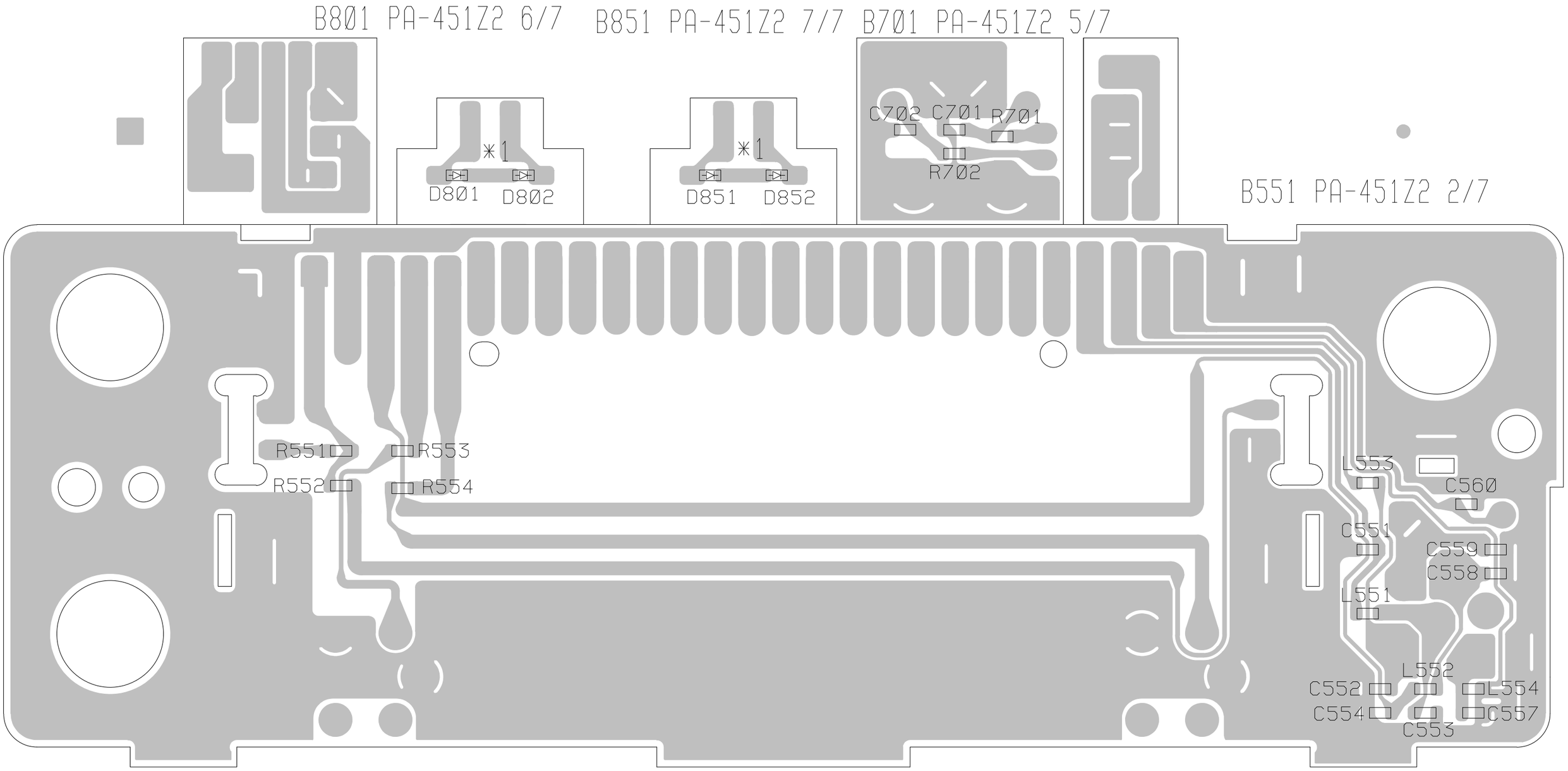

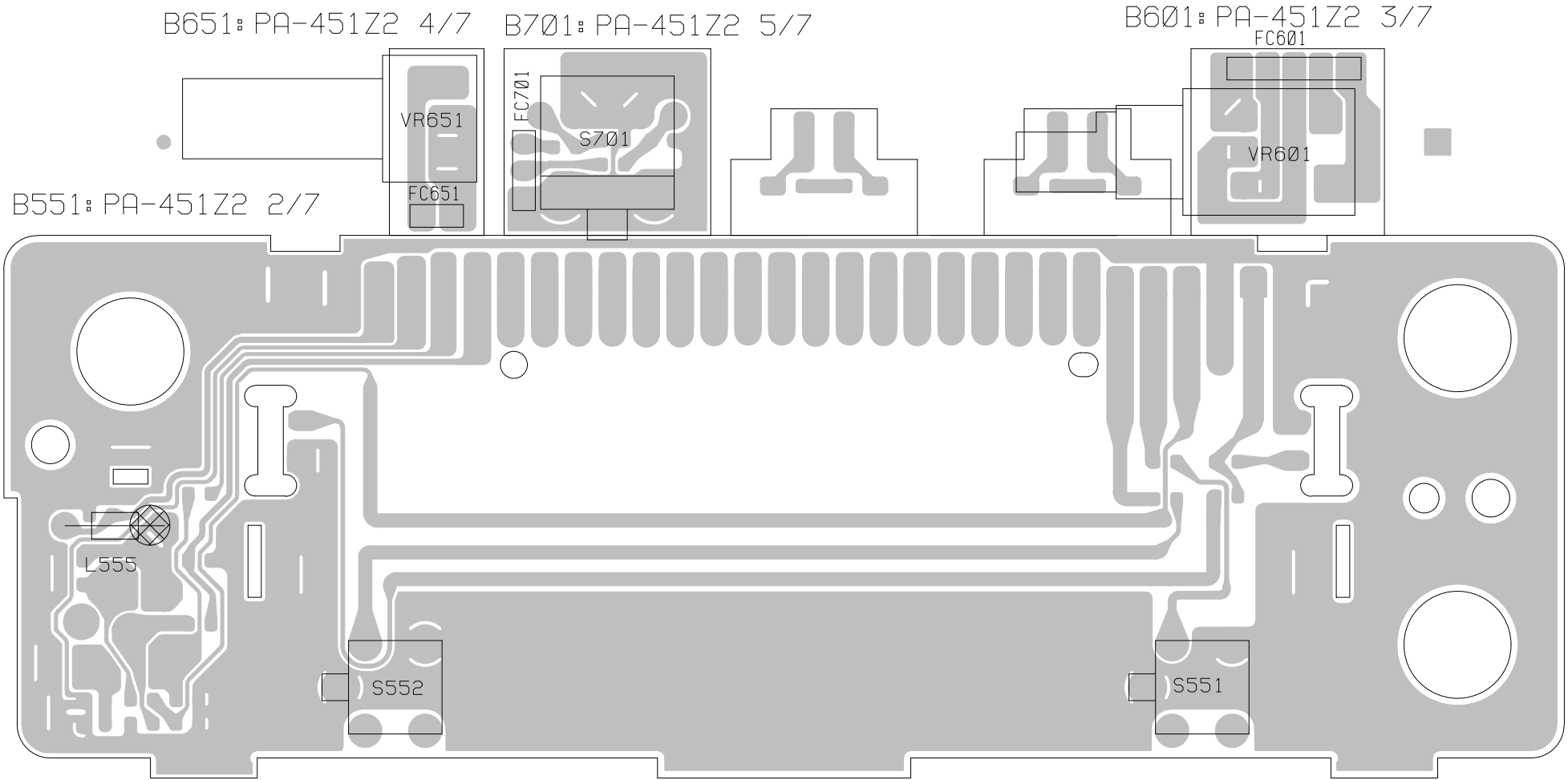

USE Pb FREE SOLDER

PCB MAIN ASSY

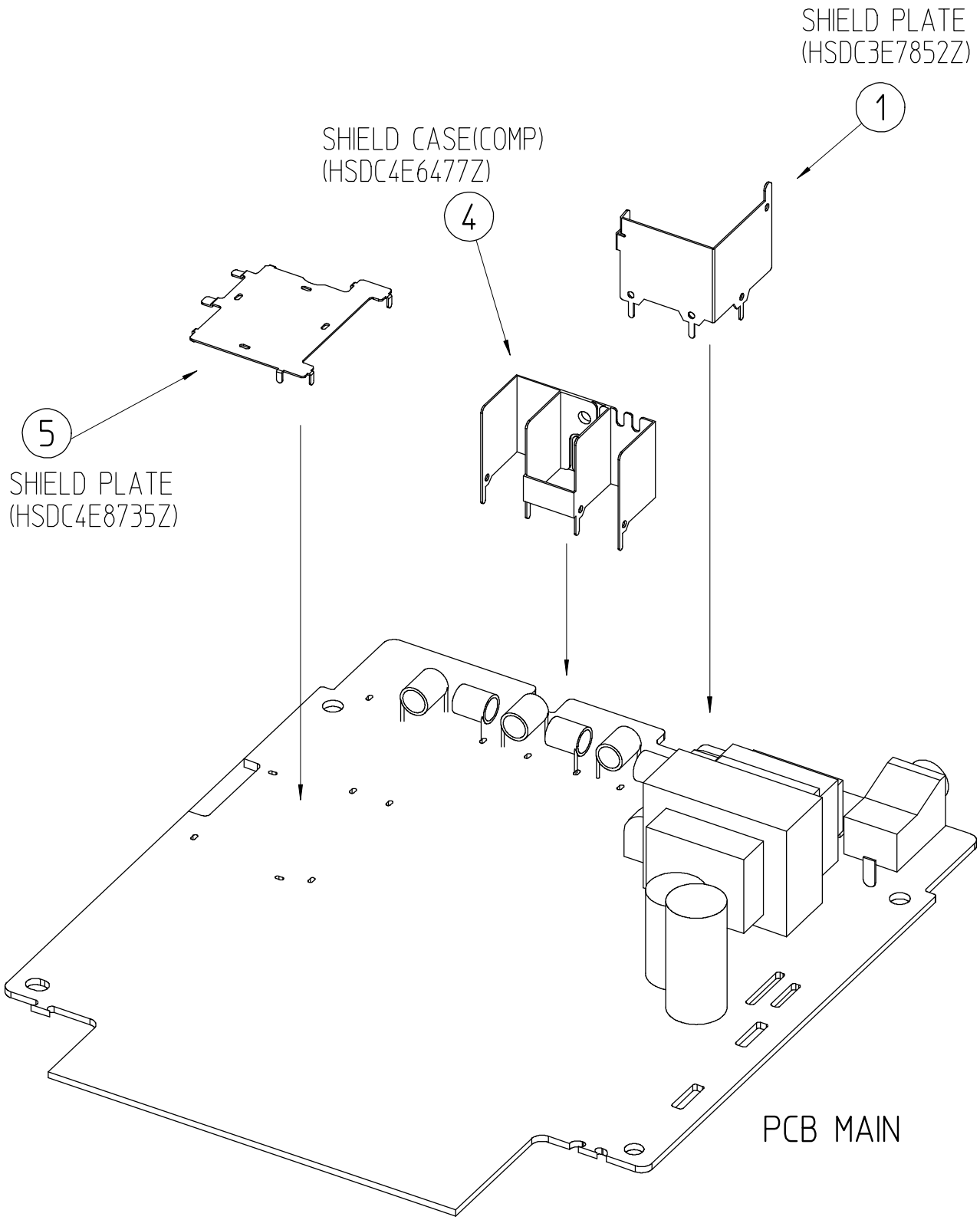

BUYER	BUYER NAME	MODEL	
GPE	TOMMY ASC	**UT380ZH**	BASE ASSY 1/13

uniden CORPORATION.

PCB FRONT ASSY

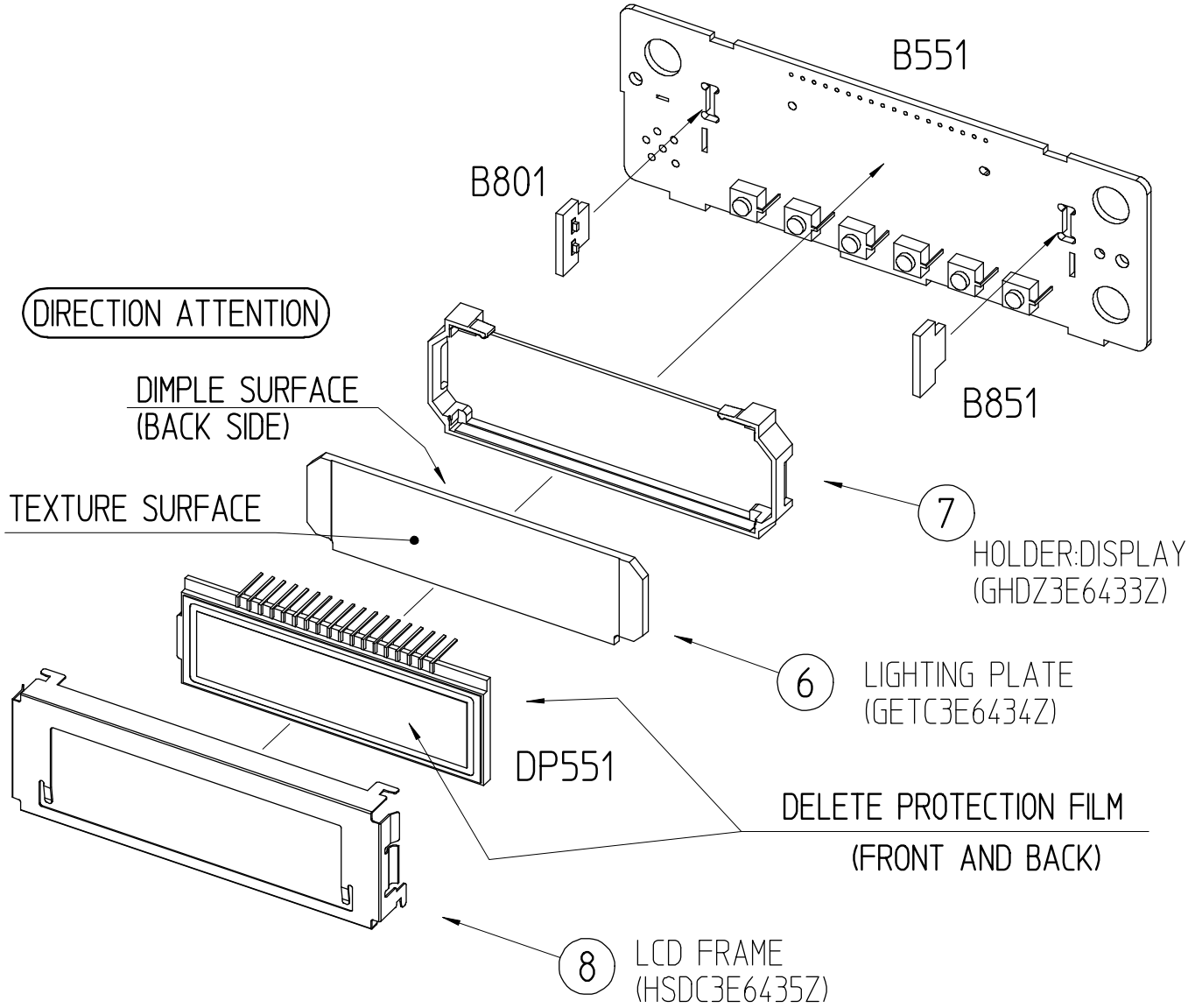

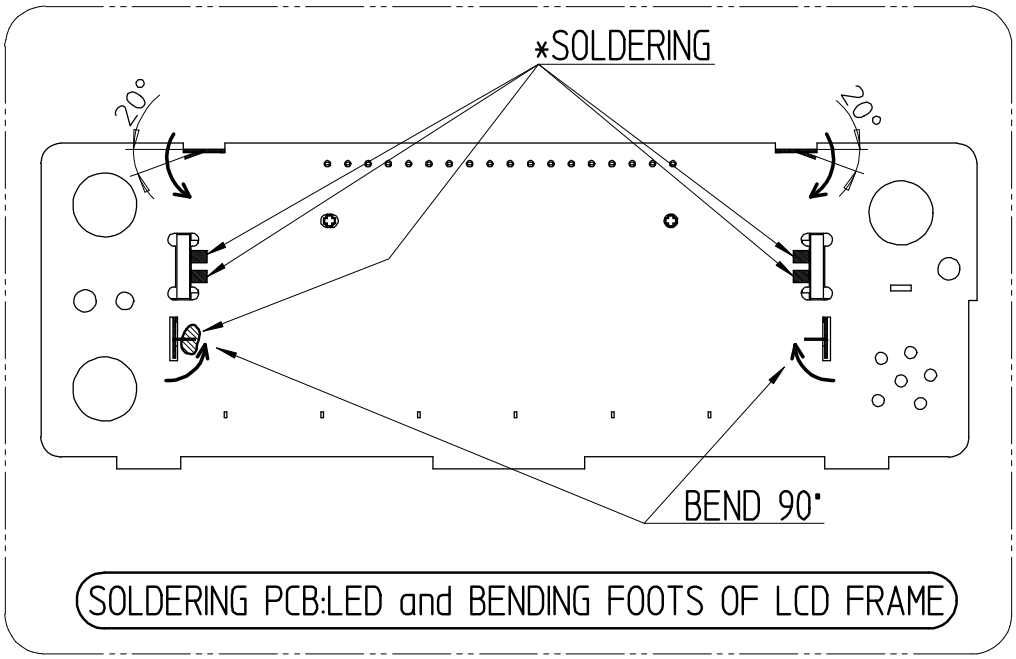

SOLDERING PCB:LED and BENDING FOOTS OF LCD FRAME

BUYER	BUYER NAME	MODEL	
GPE	TOMMY ASC	**UT380ZH**	BASE ASSY 2/13

uniden CORPORATION.

PANEL:FORNT ASSY

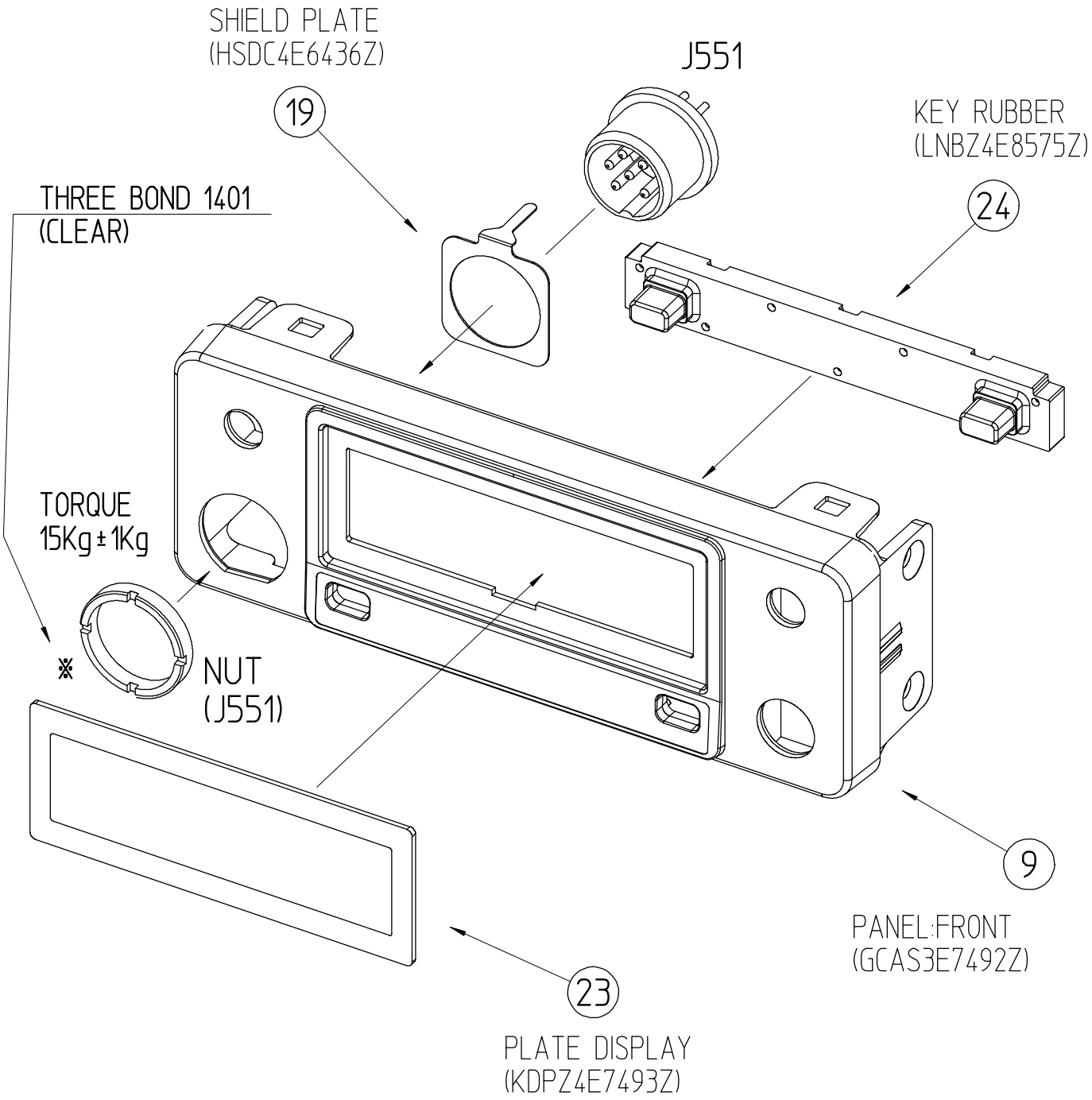

BUYER	BUYER NAME	MODEL	
GPE	TOMMY ASC	**UT380ZH**	BASE ASSY 3/13

uniden CORPORATION.

FRONT ASSY

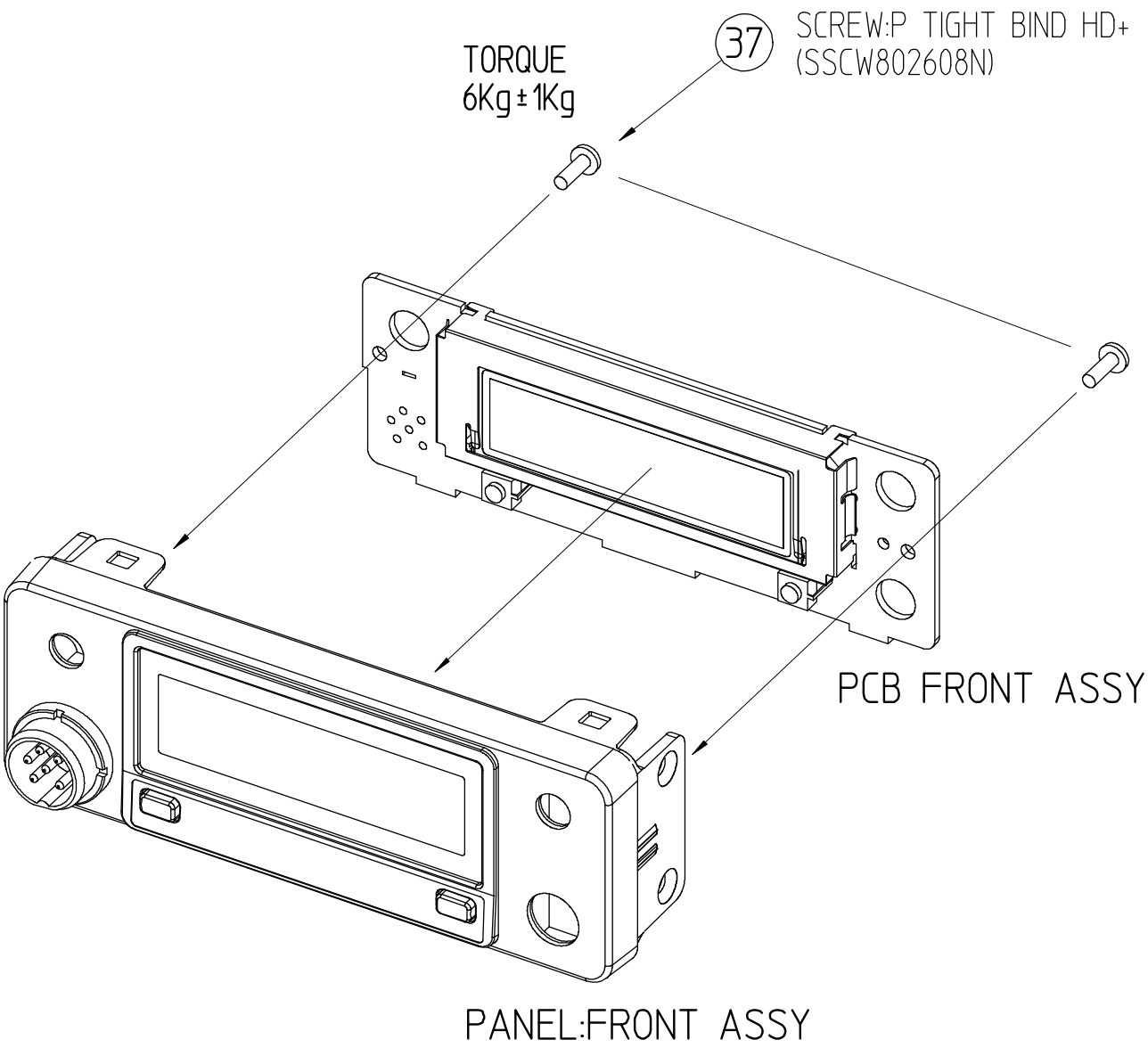

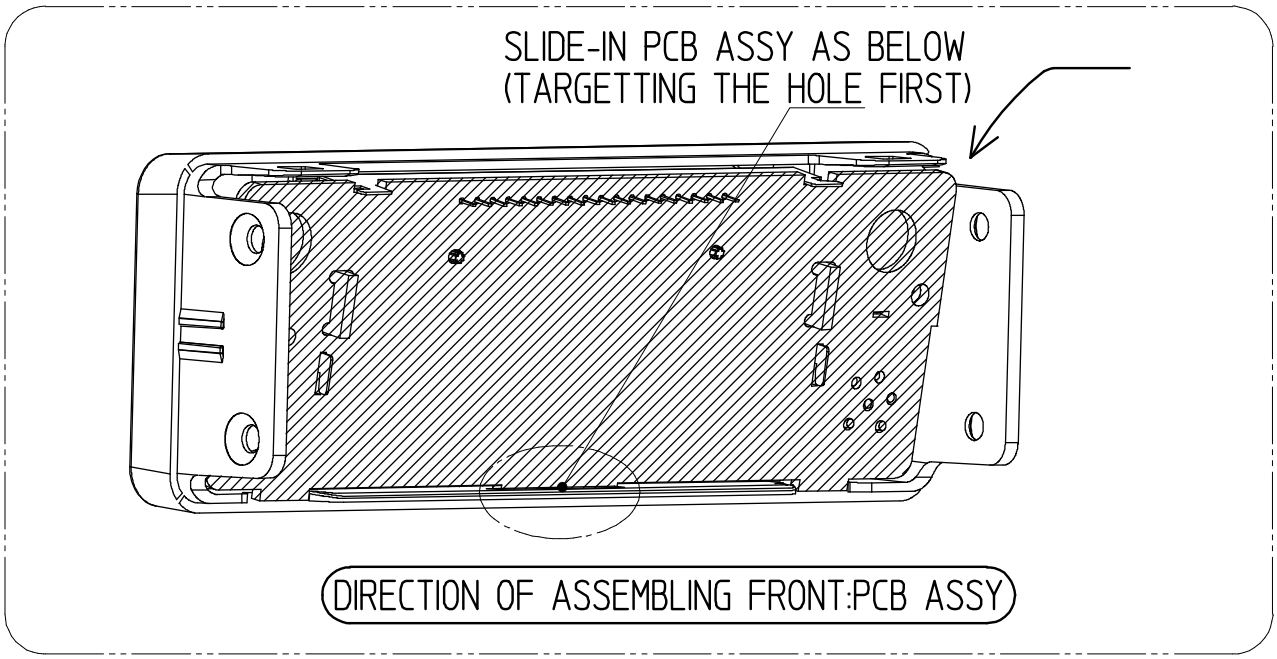

BUYER	BUYER NAME	MODEL	
GPE	TOMMY ASC	**UT380ZH**	BASE ASSY 4/13

uniden CORPORATION.

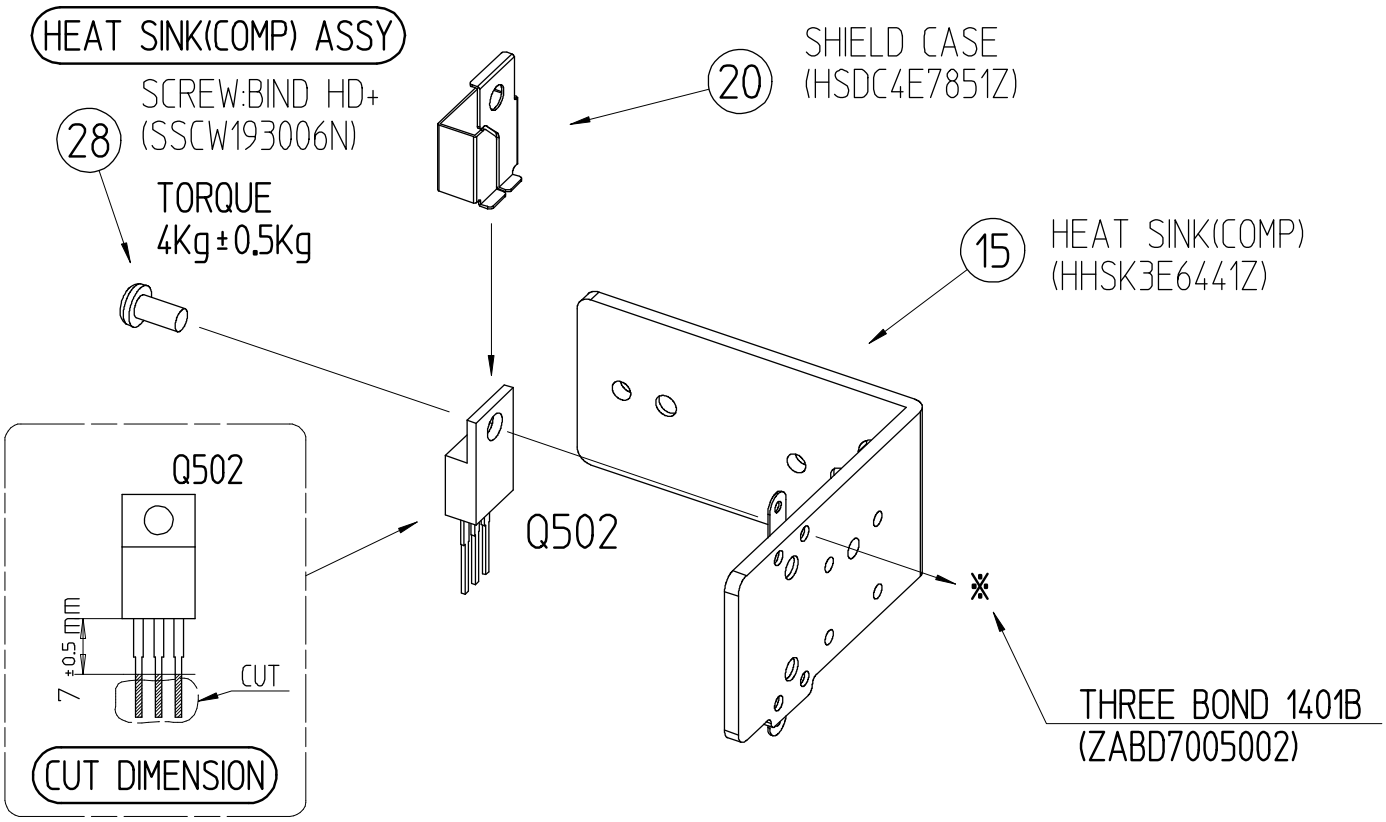

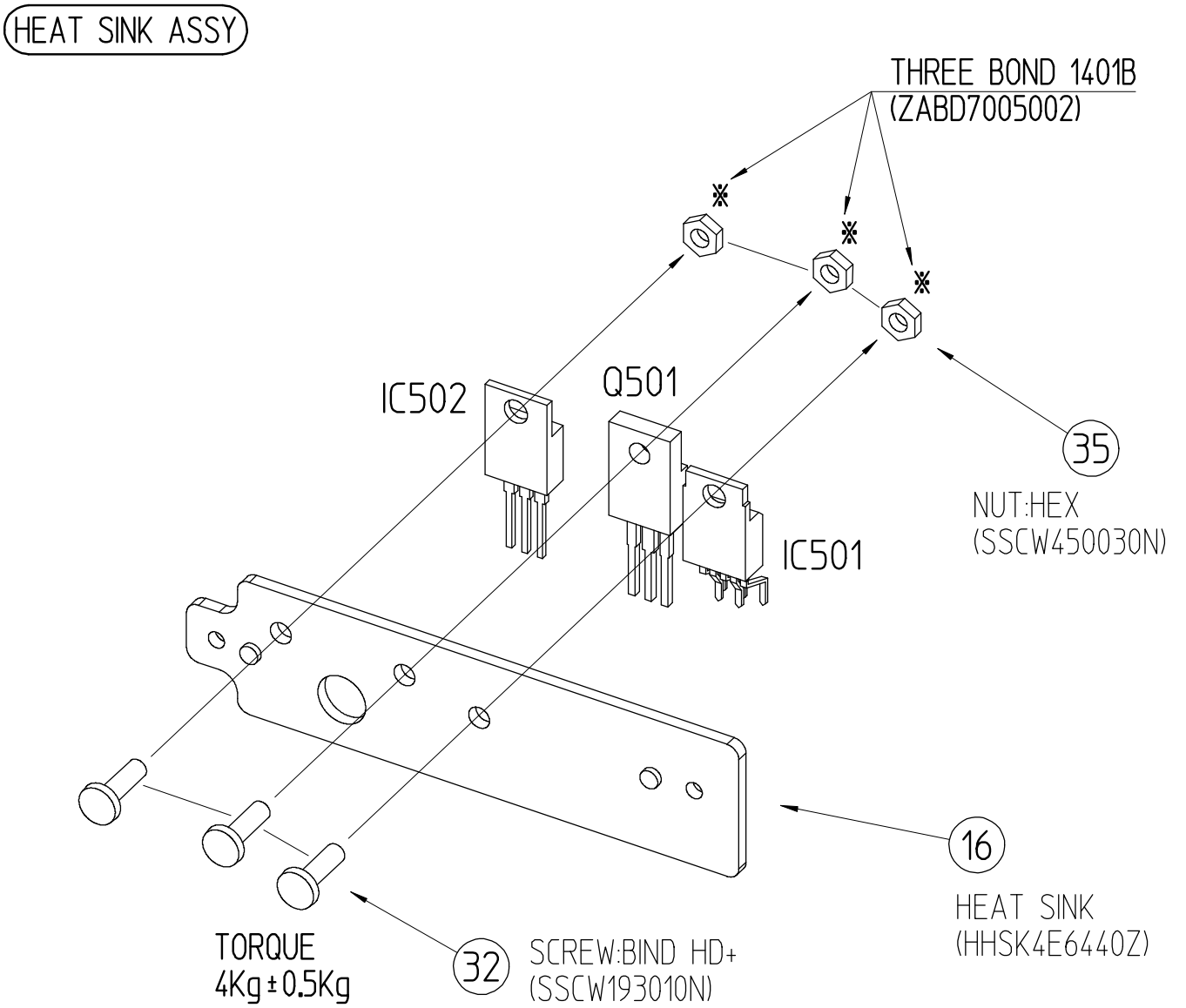

BUYER	BUYER NAME	MODEL	
GPE	TOMMY ASC	**UT380ZH**	BASE ASSY 5/13

uniden CORPORATION.

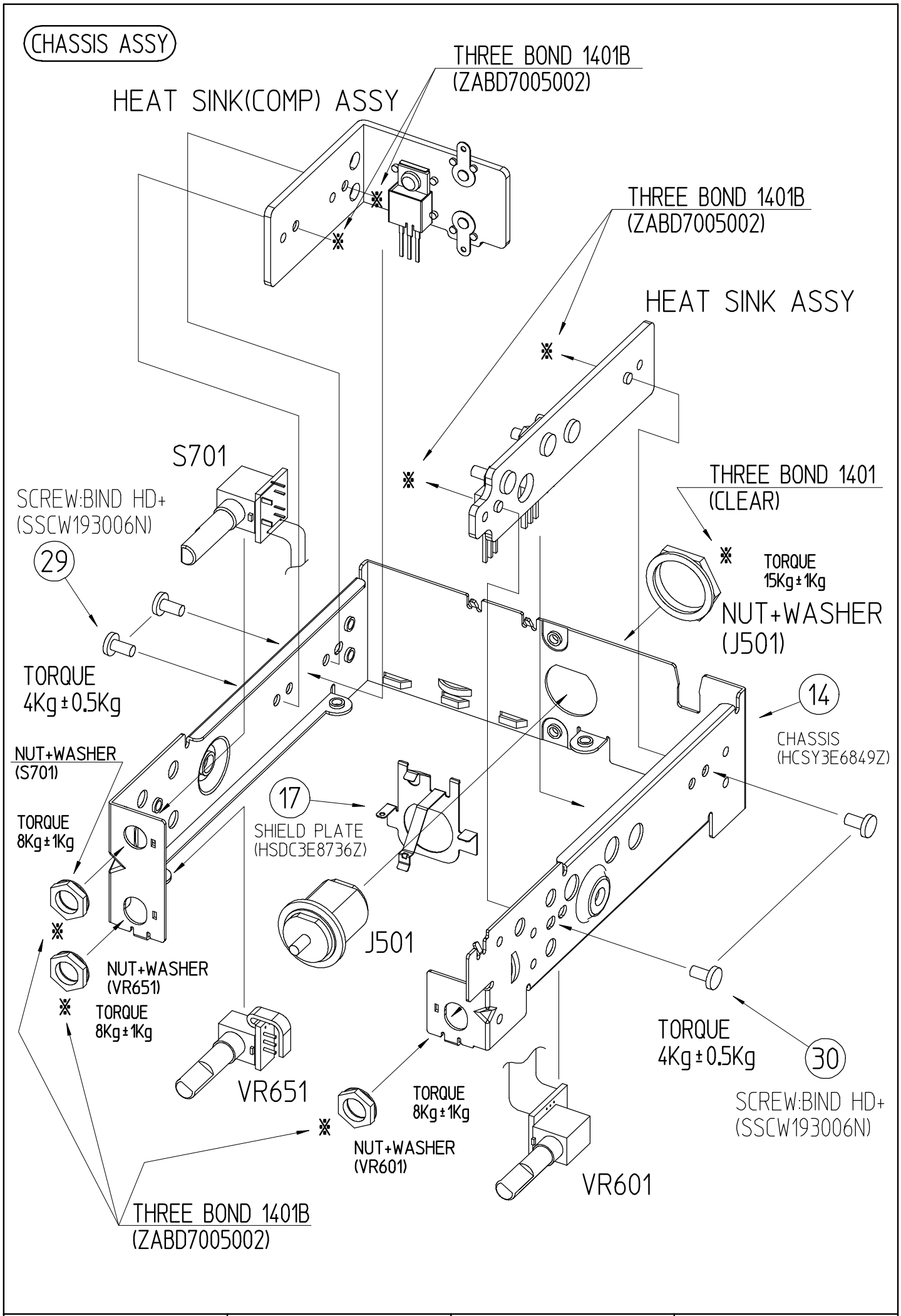

BUYER	BUYER NAME	MODEL	
GPE	TOMMY ASC	**UT380ZH**	BASE ASSY 6/13

uniden CORPORATION.

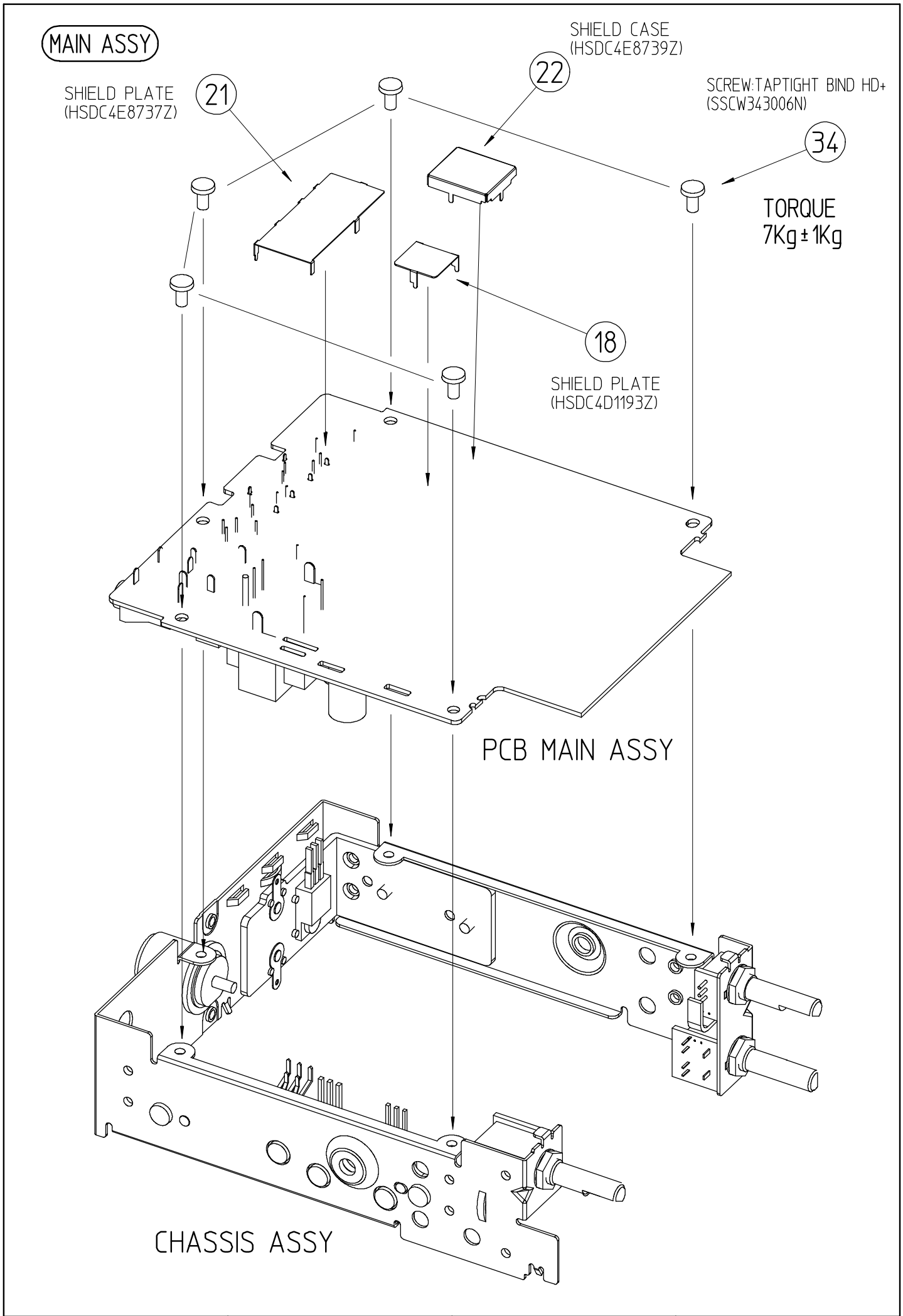

BUYER	BUYER NAME	MODEL	
GPE	TOMMY ASC	**UT380ZH**	BASE ASSY 7/13

uniden CORPORATION.

MAIN ASSY 2

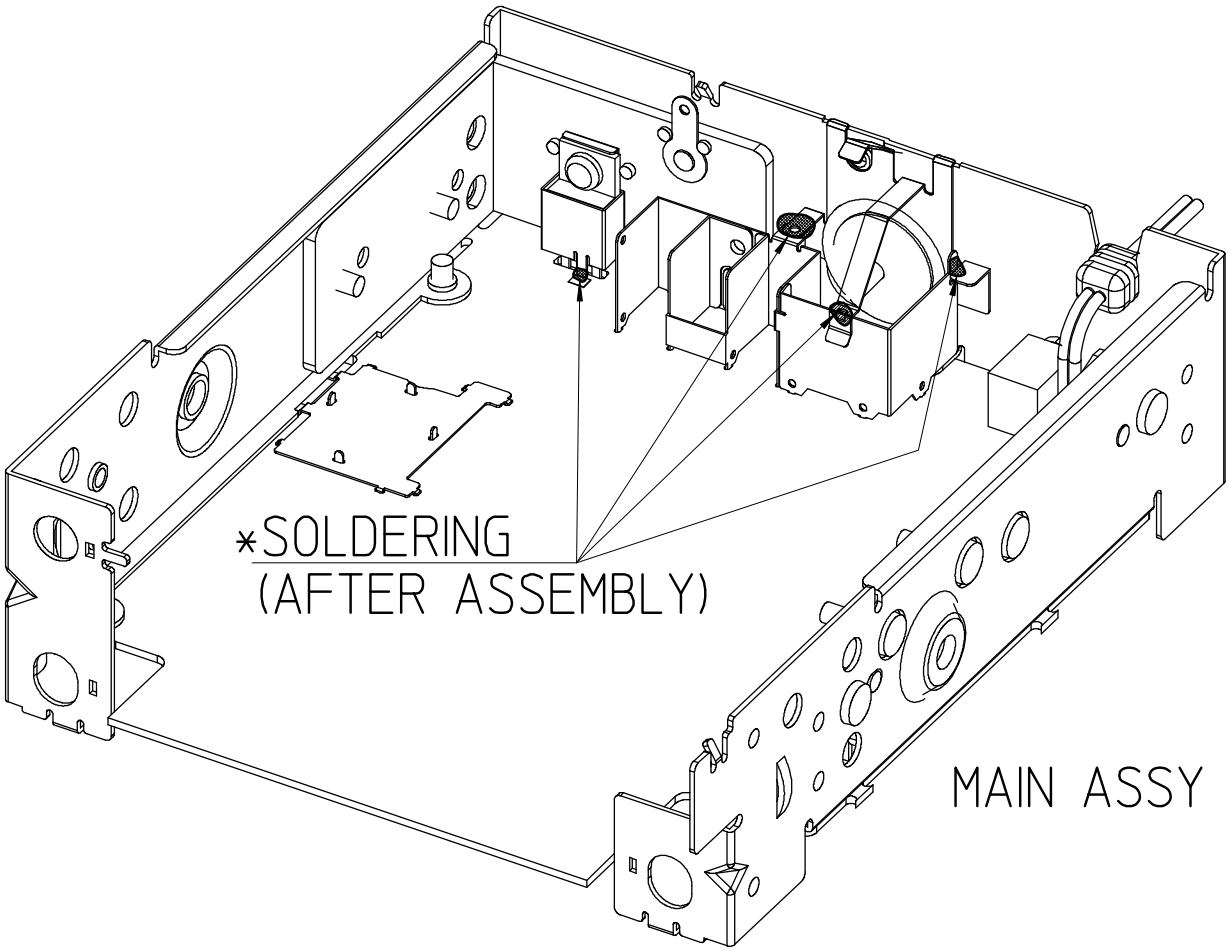

BUYER	BUYER NAME	MODEL	
GPE	TOMMY ASC	**UT380ZH**	BASE ASSY 8/13

uniden CORPORATION.

FRONT-MAIN ASSY

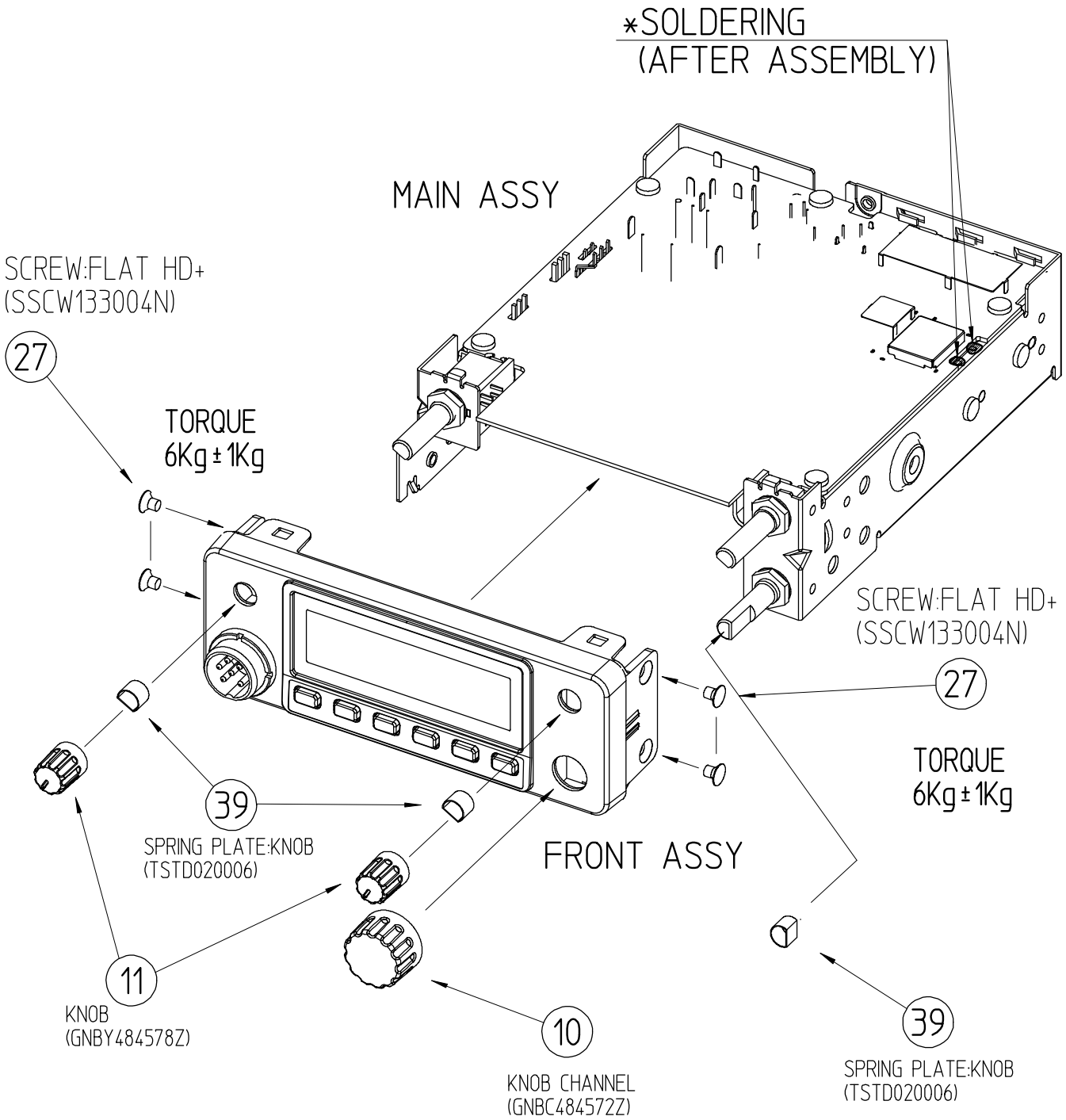

BUYER	BUYER NAME	MODEL	
GPE	TOMMY ASC	**UT380ZH**	BASE ASSY 9/13

uniden CORPORATION.

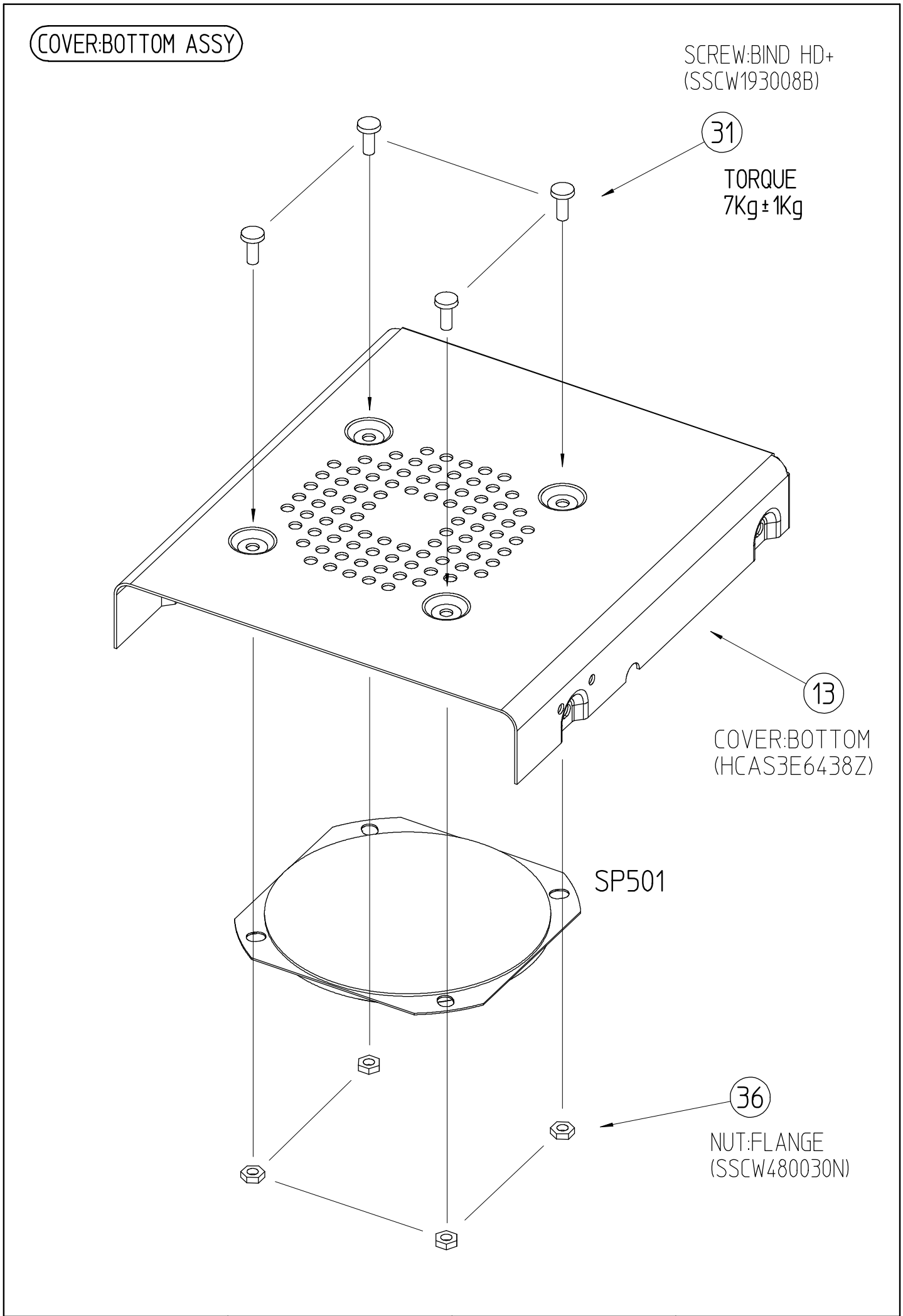

BUYER	BUYER NAME	MODEL	
GPE	TOMMY ASC	**UT380ZH**	BASE ASSY 10/13

uniden CORPORATION.

COVER ASSY

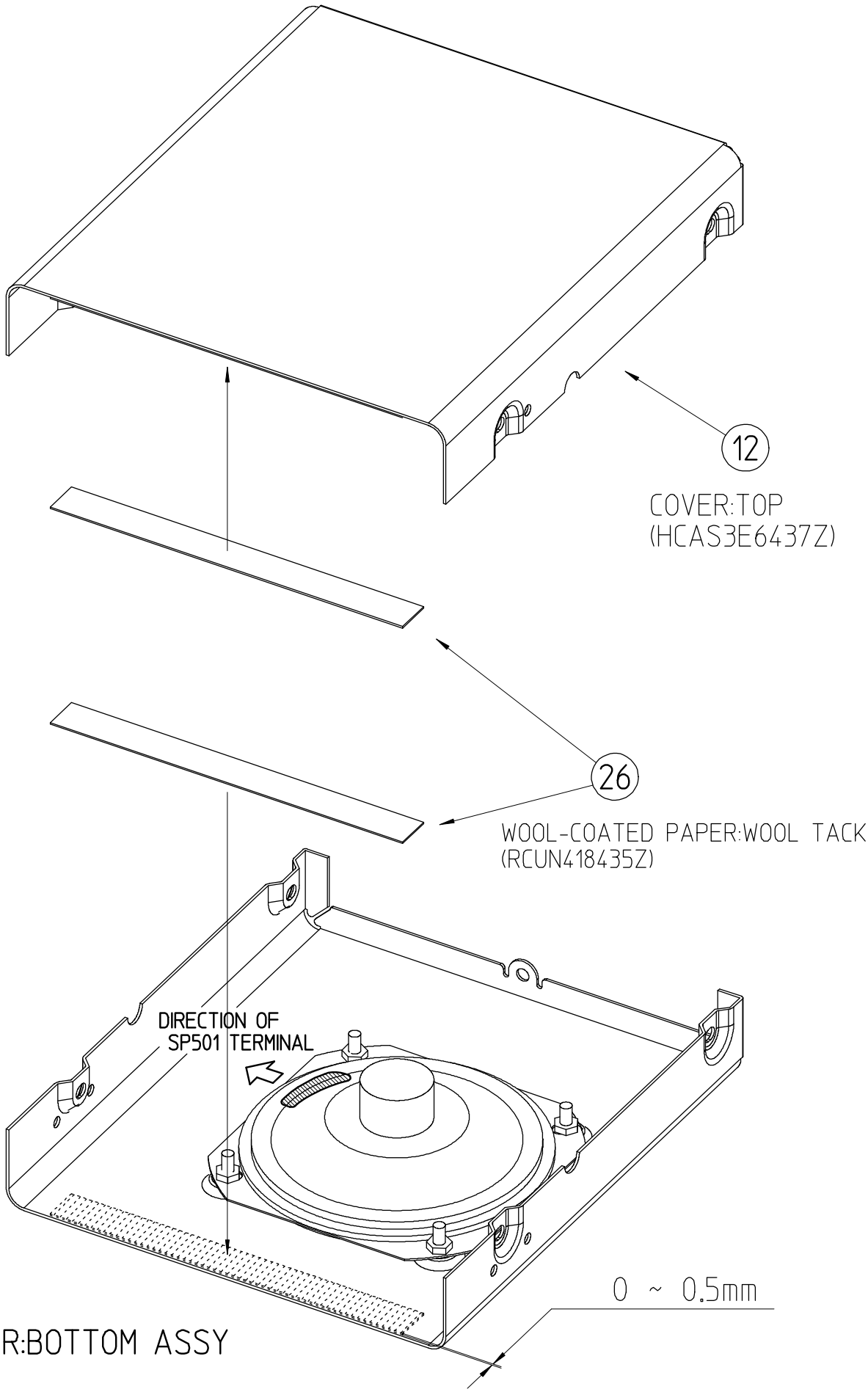

BUYER	BUYER NAME	MODEL	
GPE	TOMMY ASC	**UT380ZH**	BASE ASSY 11/13

uniden CORPORATION.

SET ASSY

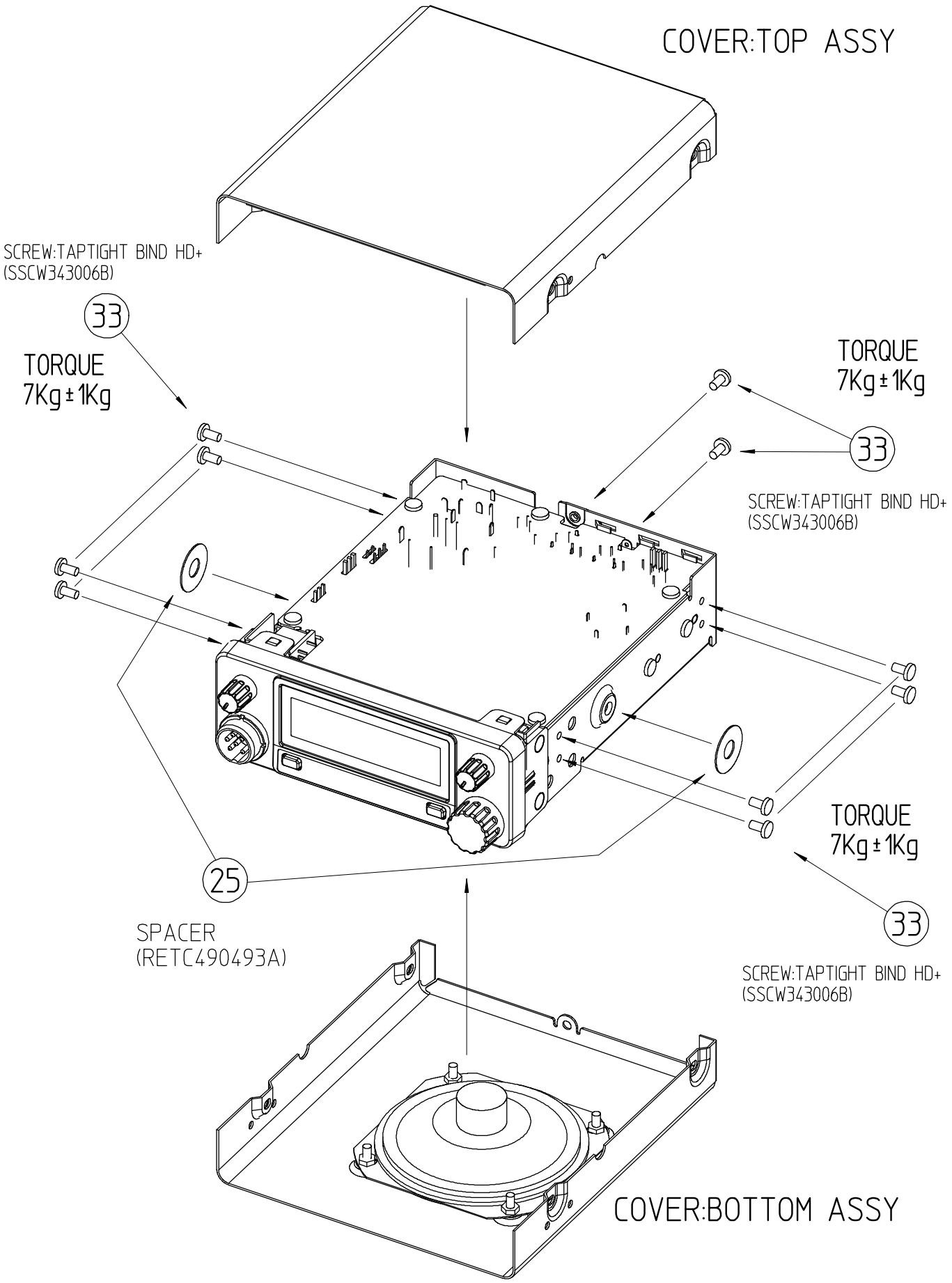

BUYER	BUYER NAME	MODEL	
GPE	TOMMY ASC	**UT380ZH**	BASE ASSY 12/13

uniden CORPORATION.

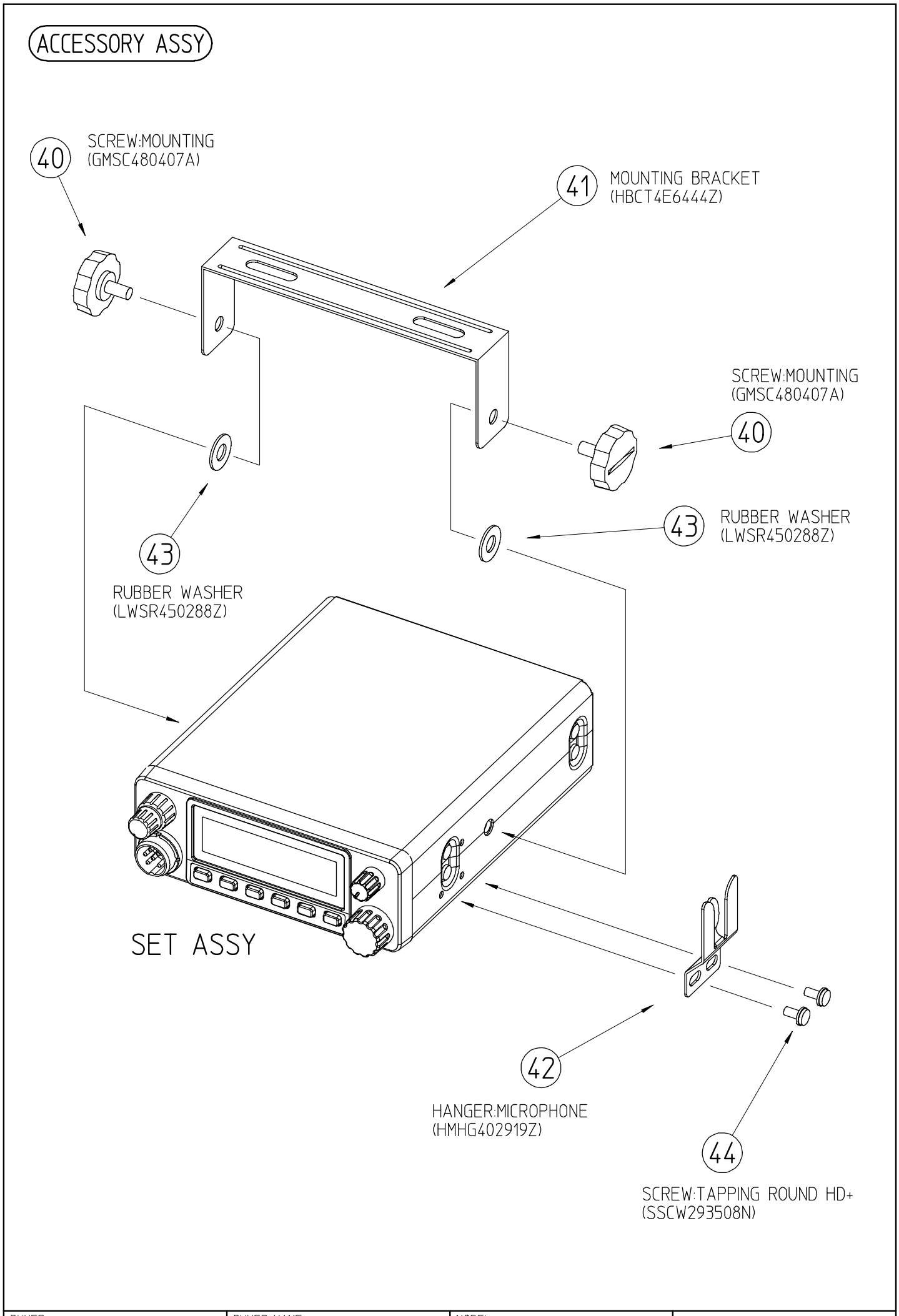

BUYER	BUYER NAME	MODEL	
GPE	TOMMY ASC	**UT380ZH**	BASE ASSY 13/13

uniden CORPORATION.

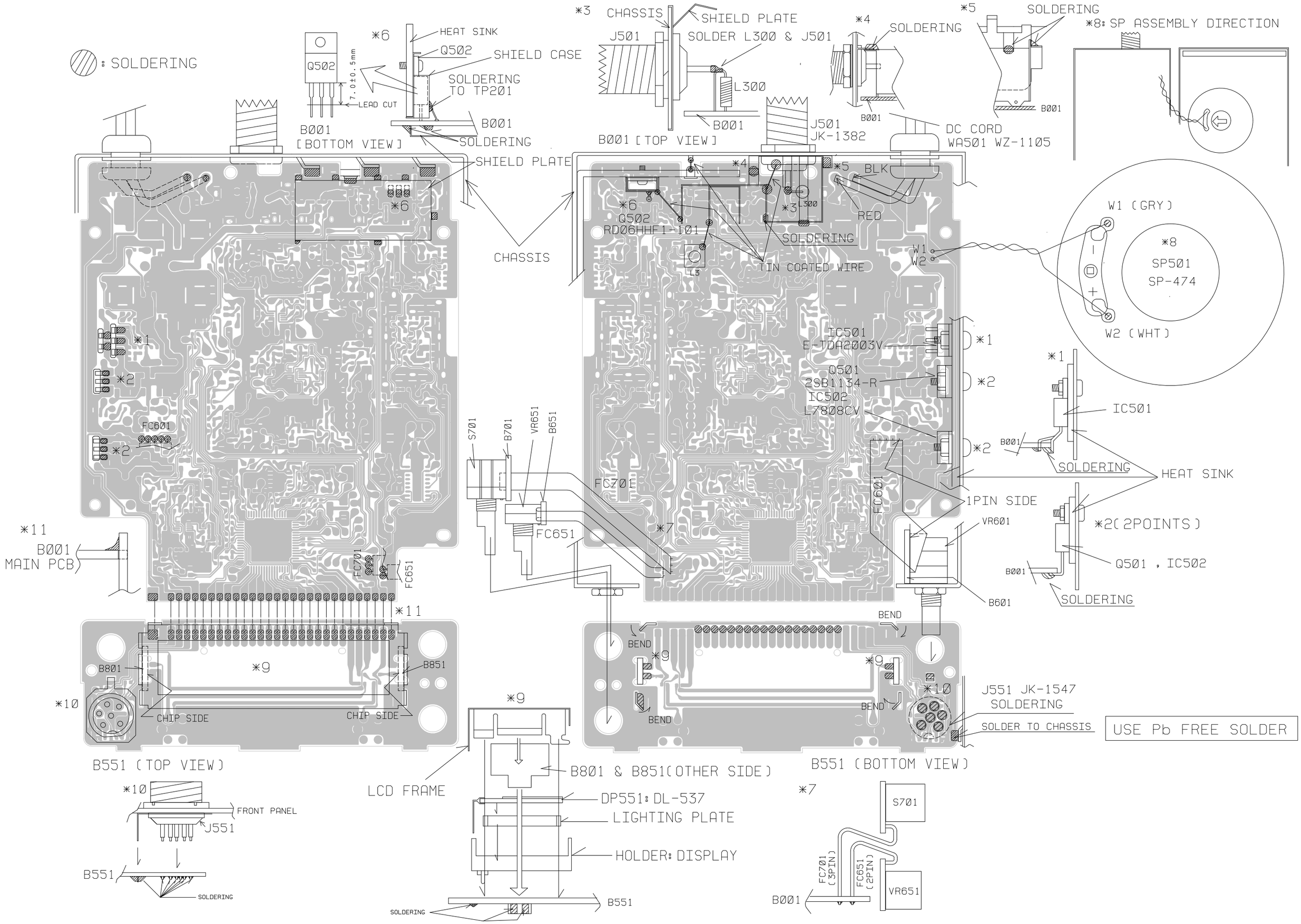
: SOLDERING
Q502
7.0±0.5mm
LEAD CUT
*6
HEAT SINK
Q502
SHIELD CASE
SOLDERING TO TP201
B001
SOLDERING
B001 [BOTTOM VIEW]
SHIELD PLATE
*3
CHASSIS
SHIELD PLATE
J501
SOLDER L300 & J501
L300
B001
B001 [TOP VIEW]
J501 JK-1382
*4
SOLDERING
B001
*5
SOLDERING
B001
DC CORD WA501 WZ-1105
*8: SP ASSEMBLY DIRECTION
CHASSIS
*6
Q502 RD06HHF1-101
L3
*4
*5
BLK
*3
L300
RED
SOLDERING
TIN COATED WIRE
W1
W2
W1 (GRY)
*8
SP501
SP-474
W2 (WHT)
*1
*2
FC601
*2
IC501 E-TDA2003V
Q501 2SB1134-R
IC502 L7808CV
*1
*2
*2
IC501
B001
SOLDERING
HEAT SINK
1PIN SIDE
FC601
VR601
*2(2POINTS)
Q501 , IC502
B001
SOLDERING
B601
S701
B701
VR651
B651
FC701
FC651
*7
*11
B001 MAIN PCB
FC701
FC651
*11
B801
*9
B851
*10
CHIP SIDE
CHIP SIDE
B551 (TOP VIEW)
BEND
BEND
*9
BEND
*9
BEND
*10
J551 JK-1547
SOLDERING
SOLDER TO CHASSIS
B551 (BOTTOM VIEW)
USE Pb FREE SOLDER
*10
FRONT PANEL
J551
B551
SOLDERING
LCD FRAME
*9
B801 & B851(OTHER SIDE)
DP551: DL-537
LIGHTING PLATE
HOLDER: DISPLAY
SOLDERING
B551
*7
S701
FC701 (3PIN)
FC651 (2PIN)
VR651
B001

TOMMY

COMPONENTS LIST

COMPONENTS LIST

ASSY CODE	PARTS CODE	DESCRIPTION	SPEC	REF NO
AT380ZKBAE	BPAG0451AB1	PCB:MAIN	PA-451AB 1/7	B001
AT380ZKBAE	BCMM811504G	C:CERAMIC M/L (1608) TAPE	15PF 50V J CH	C001
AT380ZKBAE	BCHL514706G	C:ELECTROLYTIC	47UF 25V M C-411	C002
AT380ZKBAE	BCML811025G	C:CERAMIC M/L (1608) TAPE	0.001UF 50V K B	C003
AT380ZKBAE	BCML811025G	C:CERAMIC M/L (1608) TAPE	0.001UF 50V K B	C004
AT380ZKBAE	BCMM813904G	C:CERAMIC M/L (1608) TAPE	39PF 50V J CH	C005
AT380ZKBAE	BCML811035G	C:CERAMIC M/L (1608) TAPE	0.01UF 50V K B	C006
AT380ZKBAE	BCML811035G	C:CERAMIC M/L (1608) TAPE	0.01UF 50V K B	C007
AT380ZKBAE	BCML901055G	C:CERAMIC M/L (1608) TAPE	1UF 6.3V K B	C008
AT380ZKBAE	BCHL112216G	C:ELECTROLYTIC	220UF 10V M C-411	C010
AT380ZKBAE	BCHL514706G	C:ELECTROLYTIC	47UF 25V M C-411	C011
AT380ZKBAE	BCML811035G	C:CERAMIC M/L (1608) TAPE	0.01UF 50V K B	C012
AT380ZKBAE	BCML811035G	C:CERAMIC M/L (1608) TAPE	0.01UF 50V K B	C013
AT380ZKBAE	BCMM813098G	C: CERAMIC M/L (1608) TAPE	3PF 50V B CH	C014
AT380ZKBAE	BCMM812704G	C:CERAMIC M/L (1608) TAPE	27PF 50V J CH	C015
AT380ZKBAE	BCML811035G	C:CERAMIC M/L (1608) TAPE	0.01UF 50V K B	C016
AT380ZKBAE	BCML811035G	C:CERAMIC M/L (1608) TAPE	0.01UF 50V K B	C017
AT380ZKBAE	BCML811025G	C:CERAMIC M/L (1608) TAPE	0.001UF 50V K B	C018
AT380ZKBAE	BCML811035G	C:CERAMIC M/L (1608) TAPE	0.01UF 50V K B	C019
AT380ZKBAE	BCML811035G	C:CERAMIC M/L (1608) TAPE	0.01UF 50V K B	C021
AT380ZKBAE	BCML811035G	C:CERAMIC M/L (1608) TAPE	0.01UF 50V K B	C022
AT380ZKBAE	BCML811035G	C:CERAMIC M/L (1608) TAPE	0.01UF 50V K B	C023
AT380ZKBAE	BCMM813098G	C: CERAMIC M/L (1608) TAPE	3PF 50V B CH	C025
AT380ZKBAE	BCML311045G	C:CERAMIC M/L (1608) TAPE	0.1UF 16V K B	C026
AT380ZKBAE	BCML311045G	C:CERAMIC M/L (1608) TAPE	0.1UF 16V K B	C027
AT380ZKBAE	BCML311045G	C:CERAMIC M/L (1608) TAPE	0.1UF 16V K B	C028
AT380ZKBAE	BCML311045G	C:CERAMIC M/L (1608) TAPE	0.1UF 16V K B	C029
AT380ZKBAE	BCML811035G	C:CERAMIC M/L (1608) TAPE	0.01UF 50V K B	C031
AT380ZKBAE	BCML311045G	C:CERAMIC M/L (1608) TAPE	0.1UF 16V K B	C032
AT380ZKBAE	BCML311045G	C:CERAMIC M/L (1608) TAPE	0.1UF 16V K B	C033
AT380ZKBAE	BCML311045G	C:CERAMIC M/L (1608) TAPE	0.1UF 16V K B	C034
AT380ZKBAE	BCML311045G	C:CERAMIC M/L (1608) TAPE	0.1UF 16V K B	C035
AT380ZKBAE	BCMM814704G	C:CERAMIC M/L (1608) TAPE	47PF 50V J CH	C036
AT380ZKBAE	BCMM813314G	C:CERAMIC M/L (1608) TAPE	330PF 50V J CH	C037
AT380ZKBAE	BCMM812214G	C:CERAMIC M/L (1608) TAPE	220PF 50V J CH	C039
AT380ZKBAE	BCML901055G	C:CERAMIC M/L (1608) TAPE	1UF 6.3V K B	C041
AT380ZKBAE	BCMM814714G	C:CERAMIC M/L (1608) TAPE	470PF 50V J CH	C042
AT380ZKBAE	BCMM812214G	C:CERAMIC M/L (1608) TAPE	220PF 50V J CH	C043
AT380ZKBAE	BCML111055G	C:CERAMIC M/L (1608) TAPE	1UF 10V K B	C045
AT380ZKBAE	BCML311045G	C:CERAMIC M/L (1608) TAPE	0.1UF 16V K B	C046
AT380ZKBAE	BCML901055G	C:CERAMIC M/L (1608) TAPE	1UF 6.3V K B	C047
AT380ZKBAE	BCML811025G	C:CERAMIC M/L (1608) TAPE	0.001UF 50V K B	C048

AT380ZKBAE	BCML901055G	C:CERAMIC M/L (1608) TAPE	1UF 6.3V K B	C049
AT380ZKBAE	BCML311045G	C:CERAMIC M/L (1608) TAPE	0.1UF 16V K B	C051
AT380ZKBAE	BCHL111016G	C:ELECTROLYTIC	100UF 10V M C-411	C057
AT380ZKBAE	BCML811025G	C:CERAMIC M/L (1608) TAPE	0.001UF 50V K B	C058
AT380ZKBAE	BCML311045G	C:CERAMIC M/L (1608) TAPE	0.1UF 16V K B	C059
AT380ZKBAE	BCML814725G	C:CERAMIC M/L (1608) TAPE	0.0047UF 50V K B	C061
AT380ZKBAE	BCHL514706G	C:ELECTROLYTIC	47UF 25V M C-411	C062
AT380ZKBAE	BCML311045G	C:CERAMIC M/L (1608) TAPE	0.1UF 16V K B	C063
AT380ZKBAE	BCML311045G	C:CERAMIC M/L (1608) TAPE	0.1UF 16V K B	C064
AT380ZKBAE	BCHL314716G	C:ELECTROLYTIC	470UF 16V M C-411	C065
AT380ZKBAE	BCML811025G	C:CERAMIC M/L (1608) TAPE	0.001UF 50V K B	C066
AT380ZKBAE	BCML811025G	C:CERAMIC M/L (1608) TAPE	0.001UF 50V K B	C067
AT380ZKBAE	BCML811025G	C:CERAMIC M/L (1608) TAPE	0.001UF 50V K B	C069
AT380ZKBAE	BCMM811504G	C:CERAMIC M/L (1608) TAPE	15PF 50V J CH	C200
AT380ZKBAE	BCMM811014G	C:CERAMIC M/L (1608) TAPE	100PF 50V J CH	C201
AT380ZKBAE	BCMM811814G	C:CERAMIC M/L (1608) TAPE	180PF 50V J CH	C202
AT380ZKBAE	BCMM811804G	C:CERAMIC M/L (1608) TAPE	18PF 50V J CH	C203
AT380ZKBAE	BCMM811814G	C:CERAMIC M/L (1608) TAPE	180PF 50V J CH	C204
AT380ZKBAE	BCMM811204G	C:CERAMIC M/L (1608) TAPE	12PF 50V J CH	C205
AT380ZKBAE	BCMM811514G	C:CERAMIC M/L (1608) TAPE	150PF 50V J CH	C206
AT380ZKBAE	BCMM811504G	C:CERAMIC M/L (1608) TAPE	15PF 50V J CH	C207
AT380ZKBAE	BCMM811014G	C:CERAMIC M/L (1608) TAPE	100PF 50V J CH	C208
AT380ZKBAE	BCMM811014G	C:CERAMIC M/L (1608) TAPE	100PF 50V J CH	C209
AT380ZKBAE	BCMM816814G	C:CERAMIC M/L (1608) TAPE	680PF 50V J CH	C211
AT380ZKBAE	BCMM816814G	C:CERAMIC M/L (1608) TAPE	680PF 50V J CH	C212
AT380ZKBAE	BCMM811014G	C:CERAMIC M/L (1608) TAPE	100PF 50V J CH	C213
AT380ZKBAE	BCMM812098G	C: CERAMIC M/L (1608) TAPE	2PF 50V B CH	C214
AT380ZKBAE	BCML311045G	C:CERAMIC M/L (1608) TAPE	0.1UF 16V K B	C215
AT380ZKBAE	BCML811035G	C:CERAMIC M/L (1608) TAPE	0.01UF 50V K B	C216
AT380ZKBAE	BCML811035G	C:CERAMIC M/L (1608) TAPE	0.01UF 50V K B	C217
AT380ZKBAE	BCML811035G	C:CERAMIC M/L (1608) TAPE	0.01UF 50V K B	C218
AT380ZKBAE	BCMM812214G	C:CERAMIC M/L (1608) TAPE	220PF 50V J CH	C219
AT380ZKBAE	BCML811035G	C:CERAMIC M/L (1608) TAPE	0.01UF 50V K B	C221
AT380ZKBAE	BCML814725G	C:CERAMIC M/L (1608) TAPE	0.0047UF 50V K B	C222
AT380ZKBAE	BCMM811504G	C:CERAMIC M/L (1608) TAPE	15PF 50V J CH	C223
AT380ZKBAE	BCMM813304G	C:CERAMIC M/L (1608) TAPE	33PF 50V J CH	C224
AT380ZKBAE	BCML811035G	C:CERAMIC M/L (1608) TAPE	0.01UF 50V K B	C225
AT380ZKBAE	BCML311045G	C:CERAMIC M/L (1608) TAPE	0.1UF 16V K B	C226
AT380ZKBAE	BCMM811514G	C:CERAMIC M/L (1608) TAPE	150PF 50V J CH	C227
AT380ZKBAE	BCMM818204G	C:CERAMIC M/L (1608) TAPE	82PF 50V J CH	C228
AT380ZKBAE	BCML811035G	C:CERAMIC M/L (1608) TAPE	0.01UF 50V K B	C229
AT380ZKBAE	BCML811025G	C:CERAMIC M/L (1608) TAPE	0.001UF 50V K B	C230
AT380ZKBAE	BCML901055G	C:CERAMIC M/L (1608) TAPE	1UF 6.3V K B	C231
AT380ZKBAE	BCML811035G	C:CERAMIC M/L (1608) TAPE	0.01UF 50V K B	C232
AT380ZKBAE	BCML311045G	C:CERAMIC M/L (1608) TAPE	0.1UF 16V K B	C233
AT380ZKBAE	BCML311045G	C:CERAMIC M/L (1608) TAPE	0.1UF 16V K B	C241
AT380ZKBAE	BCML811035G	C:CERAMIC M/L (1608) TAPE	0.01UF 50V K B	C242
AT380ZKBAE	BCML811025G	C:CERAMIC M/L (1608) TAPE	0.001UF 50V K B	C243

AT380ZKBAE	BCML311045G	C:CERAMIC M/L (1608) TAPE	0.1UF 16V K B	C245
AT380ZKBAE	BCHL112216G	C:ELECTROLYTIC	220UF 10V M C-411	C246
AT380ZKBAE	BCHL114716G	C:ELECTROLYTIC	470UF 10V M C-411	C247
AT380ZKBAE	BCML311045G	C:CERAMIC M/L (1608) TAPE	0.1UF 16V K B	C248
AT380ZKBAE	BCML901055G	C:CERAMIC M/L (1608) TAPE	1UF 6.3V K B	C249
AT380ZKBAE	BCMM813314G	C:CERAMIC M/L (1608) TAPE	330PF 50V J CH	C251
AT380ZKBAE	BCMM818214G	C:CERAMIC M/L (1608) TAPE	820PF 50V J CH	C252
AT380ZKBAE	BCML311045G	C:CERAMIC M/L (1608) TAPE	0.1UF 16V K B	C253
AT380ZKBAE	BCMM814704G	C:CERAMIC M/L (1608) TAPE	47PF 50V J CH	C254
AT380ZKBAE	BCML811035G	C:CERAMIC M/L (1608) TAPE	0.01UF 50V K B	C255
AT380ZKBAE	BCML811035G	C:CERAMIC M/L (1608) TAPE	0.01UF 50V K B	C261
AT380ZKBAE	BCML811035G	C:CERAMIC M/L (1608) TAPE	0.01UF 50V K B	C262
AT380ZKBAE	BCHL514706G	C:ELECTROLYTIC	47UF 25V M C-411	C263
AT380ZKBAE	BCMM811014G	C:CERAMIC M/L (1608) TAPE	100PF 50V J CH	C300
AT380ZKBAE	BCML811035G	C:CERAMIC M/L (1608) TAPE	0.01UF 50V K B	C301
AT380ZKBAE	BCML811035G	C:CERAMIC M/L (1608) TAPE	0.01UF 50V K B	C302
AT380ZKBAE	BCML811025G	C:CERAMIC M/L (1608) TAPE	0.001UF 50V K B	C303
AT380ZKBAE	BCJW511026G	C:ELECTROLYTIC	1000UF 25V M C-440	C304
AT380ZKBAE	BCML811035G	C:CERAMIC M/L (1608) TAPE	0.01UF 50V K B	C306
AT380ZKBAE	BCML811035G	C:CERAMIC M/L (1608) TAPE	0.01UF 50V K B	C307
AT380ZKBAE	BCML811025G	C:CERAMIC M/L (1608) TAPE	0.001UF 50V K B	C308
AT380ZKBAE	BCML811035G	C:CERAMIC M/L (1608) TAPE	0.01UF 50V K B	C309
AT380ZKBAE	BCHL111016G	C:ELECTROLYTIC	100UF 10V M C-411	C311
AT380ZKBAE	BCML811035G	C:CERAMIC M/L (1608) TAPE	0.01UF 50V K B	C312
AT380ZKBAE	BCMM815091G	C: CERAMIC M/L (1608) TAPE	5PF 50V C CH	C313
AT380ZKBAE	BCMM812204G	C:CERAMIC M/L (1608) TAPE	22PF 50V J CH	C314
AT380ZKBAE	BCMM811514G	C:CERAMIC M/L (1608) TAPE	150PF 50V J CH	C315
AT380ZKBAE	BCMM811514G	C:CERAMIC M/L (1608) TAPE	150PF 50V J CH	C316
AT380ZKBAE	BCML811035G	C:CERAMIC M/L (1608) TAPE	0.01UF 50V K B	C317
AT380ZKBAE	BCML311045G	C:CERAMIC M/L (1608) TAPE	0.1UF 16V K B	C318
AT380ZKBAE	BCML811035G	C:CERAMIC M/L (1608) TAPE	0.01UF 50V K B	C319
AT380ZKBAE	BCHL111016G	C:ELECTROLYTIC	100UF 10V M C-411	C321
AT380ZKBAE	BCSH662286G	CAPACITOR:TANTALUM CHIP	0.22UF 35V M C-122 TAPE	C322
AT380ZKBAE	BCSH312296G	C:TANTALUM CHIP TAPE	2.2UF 16V M C-122 TAPE	C323
AT380ZKBAE	BCML814725G	C:CERAMIC M/L (1608) TAPE	0.0047UF 50V K B	C324
AT380ZKBAE	BCMM818092G	C: CERAMIC M/L (1608) TAPE	8PF 50V D CH	C325
AT380ZKBAE	BCMM812704G	C:CERAMIC M/L (1608) TAPE	27PF 50V J CH	C326
AT380ZKBAE	BCMM811002G	C:CERAMIC M/L (1608) TAPE	10PF 50V D CH	C327
AT380ZKBAE	BCMM813098G	C: CERAMIC M/L (1608) TAPE	3PF 50V B CH	C328
AT380ZKBAE	BCML811035G	C:CERAMIC M/L (1608) TAPE	0.01UF 50V K B	C331
AT380ZKBAE	BCML811035G	C:CERAMIC M/L (1608) TAPE	0.01UF 50V K B	C332
AT380ZKBAE	BCHL111026G	C:ELECTROLYTIC	1000UF 10V M C-411	C333
AT380ZKBAE	BCML311045G	C:CERAMIC M/L (1608) TAPE	0.1UF 16V K B	C334
AT380ZKBAE	BCML311045G	C:CERAMIC M/L (1608) TAPE	0.1UF 16V K B	C335
AT380ZKBAE	BCHL111016G	C:ELECTROLYTIC	100UF 10V M C-411	C336
AT380ZKBAE	BCML311045G	C:CERAMIC M/L (1608) TAPE	0.1UF 16V K B	C337
AT380ZKBAE	BCML311045G	C:CERAMIC M/L (1608) TAPE	0.1UF 16V K B	C338
AT380ZKBAE	BCML812235G	C:CERAMIC M/L (1608) TAPE	0.022UF 50V K B	C339

AT380ZKBAE	BCML811035G	C:CERAMIC M/L (1608) TAPE	0.01UF 50V K B	C341
AT380ZKBAE	BCMM812204G	C:CERAMIC M/L (1608) TAPE	22PF 50V J CH	C342
AT380ZKBAE	BCMM812204G	C:CERAMIC M/L (1608) TAPE	22PF 50V J CH	C343
AT380ZKBAE	BCML811035G	C:CERAMIC M/L (1608) TAPE	0.01UF 50V K B	C344
AT380ZKBAE	BCML311045G	C:CERAMIC M/L (1608) TAPE	0.1UF 16V K B	C345
AT380ZKBAE	BCML311045G	C:CERAMIC M/L (1608) TAPE	0.1UF 16V K B	C346
AT380ZKBAE	BCML811025G	C:CERAMIC M/L (1608) TAPE	0.001UF 50V K B	C347
AT380ZKBAE	BCML901055G	C:CERAMIC M/L (1608) TAPE	1UF 6.3V K B	C348
AT380ZKBAE	BCMM814714G	C:CERAMIC M/L (1608) TAPE	470PF 50V J CH	C401
AT380ZKBAE	BCMM814714G	C:CERAMIC M/L (1608) TAPE	470PF 50V J CH	C402
AT380ZKBAE	BCMM812714G	C:CERAMIC M/L (1608) TAPE	270PF 50V J CH	C403
AT380ZKBAE	BCMM814714G	C:CERAMIC M/L (1608) TAPE	470PF 50V J CH	C404
AT380ZKBAE	BCML311045G	C:CERAMIC M/L (1608) TAPE	0.1UF 16V K B	C405
AT380ZKBAE	BCMM812714G	C:CERAMIC M/L (1608) TAPE	270PF 50V J CH	C406
AT380ZKBAE	BCML311045G	C:CERAMIC M/L (1608) TAPE	0.1UF 16V K B	C407
AT380ZKBAE	BCML311045G	C:CERAMIC M/L (1608) TAPE	0.1UF 16V K B	C408
AT380ZKBAE	BCML901055G	C:CERAMIC M/L (1608) TAPE	1UF 6.3V K B	C409
AT380ZKBAE	BCML901055G	C:CERAMIC M/L (1608) TAPE	1UF 6.3V K B	C410
AT380ZKBAE	BCML901055G	C:CERAMIC M/L (1608) TAPE	1UF 6.3V K B	C411
AT380ZKBAE	BCTG0076450	C:TRIMMER CT-076	TZ03P450F169B00 45PF	CT301
AT380ZKBAE	BDAG0808001	DIODE:SWITCHING	1SS356 TW11	D001
AT380ZKBAE	BDAG0808001	DIODE:SWITCHING	1SS356 TW11	D002
AT380ZKBAE	BDAG1414001	DIODE	DA-1414 LL34LL4148	D004
AT380ZKBAE	BDAG1414001	DIODE	DA-1414 LL34LL4148	D005
AT380ZKBAE	BDAG1414001	DIODE	DA-1414 LL34LL4148	D006
AT380ZKBAE	BDAG1414001	DIODE	DA-1414 LL34LL4148	D007
AT380ZKBAE	BDAG1285001	DIODE	HSM88AS TL-E	D008
AT380ZKBAE	BDAG1414001	DIODE	DA-1414 LL34LL4148	D009
AT380ZKBAE	BDAG1414001	DIODE	DA-1414 LL34LL4148	D011
AT380ZKBAE	BDAG1414001	DIODE	DA-1414 LL34LL4148	D013
AT380ZKBAE	BDAG1270001	DIODE	KDS160E-RTK/P	D201
AT380ZKBAE	BDAG1423002	DIODE:ZENER	HZK5C	D202
AT380ZKBAE	BDAG1414001	DIODE	DA-1414 LL34LL4148	D204
AT380ZKBAE	BDAG1220016	DIODE:ZENER	UDZS F 3.0B TE-17	D205
AT380ZKBAE	BDAG1414001	DIODE	DA-1414 LL34LL4148	D208
AT380ZKBAE	BDAG1349001	DIODE	GD 1N4003-A2	D209
AT380ZKBAE	BDAG1414001	DIODE	DA-1414 LL34LL4148	D211
AT380ZKBAE	BDAG1355001	DIODE	SDB30A40	D301
AT380ZKBAE	BDAG1423002	DIODE:ZENER	HZK5C	D303
AT380ZKBAE	BDAG1280001	DIODE:VARICAP	HVU307 TRU-E	D304
AT380ZKBAE	BDAG1280001	DIODE:VARICAP	HVU307 TRU-E	D305
AT380ZKBAE	BDAG1265001	DIODE	DA-1265 1SS226(TE85L_F)	D401
AT380ZKBAE	BDAG1414001	DIODE	DA-1414 LL34LL4148	D402
AT380ZKBAE	BFLG1087001	FILTER:CRYSTAL	FL-1087 10M07AZ	FT001
AT380ZKBAE	BFLG0852001	FILTER:CERAMIC	FL-852 LTS455HTW	FT002
AT380ZKBAE	BDEG4463003	INTEGRATED CIRCUIT	NJM12904R-TE1-#ZZZB	IC002
AT380ZKBAE	BDEG4463003	INTEGRATED CIRCUIT	NJM12904R-TE1-#ZZZB	IC201
AT380ZKBAE	BDEG5115001	INTEGRATED CIRCUIT	M38D24G4FP	IC301

AT380ZKBAE	BDEG5009003	INTEGRATED CIRCUIT	AT24C02BN-SH-T	IC302
AT380ZKBAE	BDEG4680003	INTEGRATED CIRCUIT	XC6109C43ANR	IC303
AT380ZKBAE	BDEG4251003	INTEGRATED CIRCUIT	RH5RL50AA-T1-FA	IC304
AT380ZKBAE	BDEG2769003	INTEGRATED CIRCUIT	BU2630F-E2	IC305
AT380ZKBAE	BDEG4463003	INTEGRATED CIRCUIT	NJM12904R-TE1-#ZZZB	IC401
AT380ZKBAE	BJKG1310001	JACK:EARPHONE	JK-1310 PJ-305C	J001
AT380ZKBAE	BJKG1249003	JACK	JK-1249 IMSA-9210B-1-03Z058-PT1	J301
AT380ZKBAE	BLBG1285001	COIL	LB-1285	L001
AT380ZKBAE	BLBH1153001	COIL	LB-1153 KS2485NC	L002
AT380ZKBAE	BLBH1239001	COIL	LB-1239 KS2585N	L003
AT380ZKBAE	BLBG1276001	COIL	LB-1276	L004
AT380ZKBAE	BLBH1272001	COIL	LB-1272 7MK4A035A	L006
AT380ZKBAE	BLBH1272001	COIL	LB-1272 7MK4A035A	L007
AT380ZKBAE	BLDG0087001	COIL	LD-087 L5RH3X5X1	L009
AT380ZKBAE	BLDG0087001	COIL	LD-087 L5RH3X5X1	L010
AT380ZKBAE	BLEH0475001	COIL	LE-475 SZFDLLE-475	L201
AT380ZKBAE	BLEH0475001	COIL	LE-475 SZFDLLE-475	L202
AT380ZKBAE	BLEH0475001	COIL	LE-475 SZFDLLE-475	L203
AT380ZKBAE	BLEH0475001	COIL	LE-475 SZFDLLE-475	L204
AT380ZKBAE	BLEG0600001	COIL	LE-0600	L205
AT380ZKBAE	BLEH0475001	COIL	LE-475 SZFDLLE-475	L206
AT380ZKBAE	BLZG0041478	INDUCTOR:MOLDED	LZ-041 0.47UH K	L207
AT380ZKBAE	BLEG0600001	COIL	LE-0600	L208
AT380ZKBAE	BLZG0207601	INDUCTOR:MOLDED CHIP	LZ-207 MMZ1608Y601BT 600	L209
AT380ZKBAE	BLZG0041338	INDUCTOR:MOLDED	LZ-041 0.33UH K	L211
AT380ZKBAE	BLDH0252001	COIL	LD-252 SZFDLLD-252	L300
AT380ZKBAE	BLDG0087001	COIL	LD-087 L5RH3X5X1	L301
AT380ZKBAE	BLDG0087001	COIL	LD-087 L5RH3X5X1	L302
AT380ZKBAE	BLZG0278398	INDUCTOR:MOLDED CHIP	LZ-278 LLQ2012-FR39J 390NH	L303
AT380ZKBAE	BLZG0278338	INDUCTOR:MOLDED CHIP	LZ-278 LLQ2012-FR33J 330NH	L304
AT380ZKBAE	BPGG0185001	PLUG	PG-185 IMSA-9215H-T	PG301
AT380ZKBAE	BDBL2714124	TRANSISTOR	DB-718 2SC2714-Y (TE85L_F)	Q001
AT380ZKBAE	BDCK0210303	FIELD EFFECT TRANSISTOR	DC-310 2SK210-GR(TE85L_F)	Q002
AT380ZKBAE	BDCK0210303	FIELD EFFECT TRANSISTOR	DC-310 2SK210-GR(TE85L_F)	Q003
AT380ZKBAE	BDBL2714124	TRANSISTOR	DB-718 2SC2714-Y (TE85L_F)	Q004
AT380ZKBAE	BDBN1259001	TRANSISTOR	DB-1259 KTC3875S-GR-RTK/P TAPE	Q005
AT380ZKBAE	BDBN1259001	TRANSISTOR	DB-1259 KTC3875S-GR-RTK/P TAPE	Q006
AT380ZKBAE	BDBM2114000	TRANSISTOR	DB-1300 2SD2114K	Q007
AT380ZKBAE	BDBN1259001	TRANSISTOR	DB-1259 KTC3875S-GR-RTK/P TAPE	Q009
AT380ZKBAE	BDBM2114000	TRANSISTOR	DB-1300 2SD2114K	Q011
AT380ZKBAE	BDBN1266001	TRANSISTOR	DB-1266 DTC143ZKA T146	Q012
AT380ZKBAE	BDBN1259001	TRANSISTOR	DB-1259 KTC3875S-GR-RTK/P TAPE	Q013
AT380ZKBAE	BDBL0941112	TRANSISTOR	DB-1212 2SC941TM-Y(TPE2_F)	Q201
AT380ZKBAE	BDBL4226646	TRANSISTOR	DB-1174 2SC4226-R24 T1	Q202
AT380ZKBAE	BDBN1266001	TRANSISTOR	DB-1266 DTC143ZKA T146	Q208
AT380ZKBAE	BDBM2114000	TRANSISTOR	DB-1300 2SD2114K	Q209
AT380ZKBAE	BDBN1068001	TRANSISTOR	DB-1068 DTA123JKA T146	Q213
AT380ZKBAE	BDBN1266001	TRANSISTOR	DB-1266 DTC143ZKA T146	Q214

AT380ZKBAE	BDBN1266001	TRANSISTOR	DB-1266 DTC143ZKA T146	Q216
AT380ZKBAE	BDBL3243105	TRANSISTOR	DB-1211 2SC3243-T111-E	Q217
AT380ZKBAE	BDBN1290001	TRANSISTOR	DB-1290 LMBT3906LT1G	Q218
AT380ZKBAE	BDBL4226646	TRANSISTOR	DB-1174 2SC4226-R24 T1	Q302
AT380ZKBAE	BDBL4226646	TRANSISTOR	DB-1174 2SC4226-R24 T1	Q303
AT380ZKBAE	BDBM2114000	TRANSISTOR	DB-1300 2SD2114K	Q304
AT380ZKBAE	BDBN1266001	TRANSISTOR	DB-1266 DTC143ZKA T146	Q305
AT380ZKBAE	BDBN1290001	TRANSISTOR	DB-1290 LMBT3906LT1G	Q306
AT380ZKBAE	BDBN1068001	TRANSISTOR	DB-1068 DTA123JKA T146	Q307
AT380ZKBAE	BDBN1259001	TRANSISTOR	DB-1259 KTC3875S-GR-RTK/P TAPE	Q401
AT380ZKBAE	BRFC162224G	R:CARBON FIXED CHIP(1608)	2.2K 1/16W J TAPE	R001
AT380ZKBAE	BRFC161024G	R:CARBON FIXED CHIP(1608)	1K 1/16W J TAPE	R002
AT380ZKBAE	BRFC161024G	R:CARBON FIXED CHIP(1608)	1K 1/16W J TAPE	R003
AT380ZKBAE	BRFC162224G	R:CARBON FIXED CHIP(1608)	2.2K 1/16W J TAPE	R004
AT380ZKBAE	BRFC161034G	R:CARBON FIXED CHIP(1608)	10K 1/16W J TAPE	R006
AT380ZKBAE	BRFC161024G	R:CARBON FIXED CHIP(1608)	1K 1/16W J TAPE	R007
AT380ZKBAE	BRFT141024G	R:CARBON AXIAL LEAD (52)	1K 1/4W J TAPE	R008
AT380ZKBAE	BRFC163324G	R:CARBON FIXED CHIP(1608)	3.3K 1/16W J TAPE	R009
AT380ZKBAE	BRFC162224G	R:CARBON FIXED CHIP(1608)	2.2K 1/16W J TAPE	R010
AT380ZKBAE	BRFC161014G	R:CARBON FIXED CHIP(1608)	100 1/16W J TAPE	R011
AT380ZKBAE	BRFC161024G	R:CARBON FIXED CHIP(1608)	1K 1/16W J TAPE	R013
AT380ZKBAE	BRFC162714G	R:CARBON FIXED CHIP(1608)	270 1/16W J TAPE	R014
AT380ZKBAE	BRFC162714G	R:CARBON FIXED CHIP(1608)	270 1/16W J TAPE	R015
AT380ZKBAE	BRFC181014G	R:CARBON FIXED CHIP(3216)	100 1/8W J TAPE	R016
AT380ZKBAE	BRFC161014G	R:CARBON FIXED CHIP(1608)	100 1/16W J TAPE	R017
AT380ZKBAE	BRFC165614G	R:CARBON FIXED CHIP(1608)	560 1/16W J TAPE	R018
AT380ZKBAE	BRFC161014G	R:CARBON FIXED CHIP(1608)	100 1/16W J TAPE	R019
AT380ZKBAE	BRFC180004G	R:CARBON FIXED CHIP(3216)	0 1/8W J TAPE	R020
AT380ZKBAE	BRFC163324G	R:CARBON FIXED CHIP(1608)	3.3K 1/16W J TAPE	R021
AT380ZKBAE	BRFC161034G	R:CARBON FIXED CHIP(1608)	10K 1/16W J TAPE	R022
AT380ZKBAE	BRFC161024G	R:CARBON FIXED CHIP(1608)	1K 1/16W J TAPE	R023
AT380ZKBAE	BRFC161014G	R:CARBON FIXED CHIP(1608)	100 1/16W J TAPE	R024
AT380ZKBAE	BRFC162234G	R:CARBON FIXED CHIP(1608)	22K 1/16W J TAPE	R025
AT380ZKBAE	BRFC162214G	R:CARBON FIXED CHIP(1608)	220 1/16W J TAPE	R026
AT380ZKBAE	BRFC161534G	R:CARBON FIXED CHIP(1608)	15K 1/16W J TAPE	R027
AT380ZKBAE	BRFC162224G	R:CARBON FIXED CHIP(1608)	2.2K 1/16W J TAPE	R028
AT380ZKBAE	BRFC162214G	R:CARBON FIXED CHIP(1608)	220 1/16W J TAPE	R029
AT380ZKBAE	BRFC180004G	R:CARBON FIXED CHIP(3216)	0 1/8W J TAPE	R030
AT380ZKBAE	BRFC162224G	R:CARBON FIXED CHIP(1608)	2.2K 1/16W J TAPE	R031
AT380ZKBAE	BRFC166814G	R:CARBON FIXED CHIP(1608)	680 1/16W J TAPE	R032
AT380ZKBAE	BRFC162214G	R:CARBON FIXED CHIP(1608)	220 1/16W J TAPE	R033
AT380ZKBAE	BRFC161014G	R:CARBON FIXED CHIP(1608)	100 1/16W J TAPE	R034
AT380ZKBAE	BRFC162214G	R:CARBON FIXED CHIP(1608)	220 1/16W J TAPE	R035
AT380ZKBAE	BRFC164734G	R:CARBON FIXED CHIP(1608)	47K 1/16W J TAPE	R036
AT380ZKBAE	BRFC162204G	R:CARBON FIXED CHIP(1608)	22 1/16W J TAPE	R037
AT380ZKBAE	BRFC162224G	R:CARBON FIXED CHIP(1608)	2.2K 1/16W J TAPE	R038
AT380ZKBAE	BRFC161004G	R:CARBON FIXED CHIP(1608)	10 1/16W J TAPE	R039
AT380ZKBAE	BRFC180004G	R:CARBON FIXED CHIP(3216)	0 1/8W J TAPE	R040

AT380ZKBAE	BRFC161514G	R:CARBON FIXED CHIP(1608)	150 1/16W J TAPE	R041
AT380ZKBAE	BRFC164704G	R:CARBON FIXED CHIP(1608)	47 1/16W J TAPE	R042
AT380ZKBAE	BRFC163324G	R:CARBON FIXED CHIP(1608)	3.3K 1/16W J TAPE	R043
AT380ZKBAE	BRFC161034G	R:CARBON FIXED CHIP(1608)	10K 1/16W J TAPE	R044
AT380ZKBAE	BRFC161034G	R:CARBON FIXED CHIP(1608)	10K 1/16W J TAPE	R045
AT380ZKBAE	BRFC161034G	R:CARBON FIXED CHIP(1608)	10K 1/16W J TAPE	R046
AT380ZKBAE	BRFC161044G	R:CARBON FIXED CHIP(1608)	100K 1/16W J TAPE	R047
AT380ZKBAE	BRFC161044G	R:CARBON FIXED CHIP(1608)	100K 1/16W J TAPE	R048
AT380ZKBAE	BRFC166834G	R:CARBON FIXED CHIP(1608)	68K 1/16W J TAPE	R049
AT380ZKBAE	BRFC180004G	R:CARBON FIXED CHIP(3216)	0 1/8W J TAPE	R050
AT380ZKBAE	BRFC161054G	R:CARBON FIXED CHIP(1608)	1M 1/16W J TAPE	R051
AT380ZKBAE	BRFC166834G	R:CARBON FIXED CHIP(1608)	68K 1/16W J TAPE	R052
AT380ZKBAE	BRFC161044G	R:CARBON FIXED CHIP(1608)	100K 1/16W J TAPE	R053
AT380ZKBAE	BRFC160004G	R:CARBON FIXED CHIP(1608)	0 1/16W J TAPE	R054
AT380ZKBAE	BRFC164724G	R:CARBON FIXED CHIP(1608)	4.7K 1/16W J TAPE	R055
AT380ZKBAE	BRFC164744G	R:CARBON FIXED CHIP(1608)	470K 1/16W J TAPE	R056
AT380ZKBAE	BRFC164714G	R:CARBON FIXED CHIP(1608)	470 1/16W J TAPE	R057
AT380ZKBAE	BRFC164724G	R:CARBON FIXED CHIP(1608)	4.7K 1/16W J TAPE	R058
AT380ZKBAE	BRFC161024G	R:CARBON FIXED CHIP(1608)	1K 1/16W J TAPE	R059
AT380ZKBAE	BRFC162224G	R:CARBON FIXED CHIP(1608)	2.2K 1/16W J TAPE	R060
AT380ZKBAE	BRFC161034G	R:CARBON FIXED CHIP(1608)	10K 1/16W J TAPE	R061
AT380ZKBAE	BRFC161034G	R:CARBON FIXED CHIP(1608)	10K 1/16W J TAPE	R062
AT380ZKBAE	BRFC164734G	R:CARBON FIXED CHIP(1608)	47K 1/16W J TAPE	R063
AT380ZKBAE	BRFC161044G	R:CARBON FIXED CHIP(1608)	100K 1/16W J TAPE	R064
AT380ZKBAE	BRFC161044G	R:CARBON FIXED CHIP(1608)	100K 1/16W J TAPE	R065
AT380ZKBAE	BRFC161524G	R:CARBON FIXED CHIP(1608)	1.5K 1/16W J TAPE	R066
AT380ZKBAE	BRFC161044G	R:CARBON FIXED CHIP(1608)	100K 1/16W J TAPE	R067
AT380ZKBAE	BRFC165644G	R:CARBON FIXED CHIP(1608)	560K 1/16W J TAPE	R068
AT380ZKBAE	BRFC161054G	R:CARBON FIXED CHIP(1608)	1M 1/16W J TAPE	R069
AT380ZKBAE	BRFC161014G	R:CARBON FIXED CHIP(1608)	100 1/16W J TAPE	R070
AT380ZKBAE	BRFC161544G	R:CARBON FIXED CHIP(1608)	150K 1/16W J TAPE	R071
AT380ZKBAE	BRFC161024G	R:CARBON FIXED CHIP(1608)	1K 1/16W J TAPE	R072
AT380ZKBAE	BRFC164724G	R:CARBON FIXED CHIP(1608)	4.7K 1/16W J TAPE	R073
AT380ZKBAE	BRFC164744G	R:CARBON FIXED CHIP(1608)	470K 1/16W J TAPE	R074
AT380ZKBAE	BRFC164724G	R:CARBON FIXED CHIP(1608)	4.7K 1/16W J TAPE	R075
AT380ZKBAE	BRFC166824G	R:CARBON FIXED CHIP(1608)	6.8K 1/16W J TAPE	R076
AT380ZKBAE	BRFC161524G	R:CARBON FIXED CHIP(1608)	1.5K 1/16W J TAPE	R077
AT380ZKBAE	BRFC161044G	R:CARBON FIXED CHIP(1608)	100K 1/16W J TAPE	R078
AT380ZKBAE	BRFC166824G	R:CARBON FIXED CHIP(1608)	6.8K 1/16W J TAPE	R079
AT380ZKBAE	BRFC180004G	R:CARBON FIXED CHIP(3216)	0 1/8W J TAPE	R080
AT380ZKBAE	BRFC166824G	R:CARBON FIXED CHIP(1608)	6.8K 1/16W J TAPE	R081
AT380ZKBAE	BRFC164704G	R:CARBON FIXED CHIP(1608)	47 1/16W J TAPE	R082
AT380ZKBAE	BRFC163334G	R:CARBON FIXED CHIP(1608)	33K 1/16W J TAPE	R083
AT380ZKBAE	BRFC162294G	R:CARBON FIXED CHIP(1608)	2.2 1/16W J TAPE	R084
AT380ZKBAE	BRFC180004G	R:CARBON FIXED CHIP(3216)	0 1/8W J TAPE	R085
AT380ZKBAE	BRFC180004G	R:CARBON FIXED CHIP(3216)	0 1/8W J TAPE	R086
AT380ZKBAE	BRFC180004G	R:CARBON FIXED CHIP(3216)	0 1/8W J TAPE	R087
AT380ZKBAE	BRFC161044G	R:CARBON FIXED CHIP(1608)	100K 1/16W J TAPE	R200

AT380ZKBAE	BRFC168234G	R:CARBON FIXED CHIP(1608)	82K 1/16W J TAPE	R202
AT380ZKBAE	BRFC161044G	R:CARBON FIXED CHIP(1608)	100K 1/16W J TAPE	R203
AT380ZKBAE	BRFC161524G	R:CARBON FIXED CHIP(1608)	1.5K 1/16W J TAPE	R204
AT380ZKBAE	BRFC163324G	R:CARBON FIXED CHIP(1608)	3.3K 1/16W J TAPE	R205
AT380ZKBAE	BRFC161024G	R:CARBON FIXED CHIP(1608)	1K 1/16W J TAPE	R206
AT380ZKBAE	BRFC161504G	R:CARBON FIXED CHIP(1608)	15 1/16W J TAPE	R207
AT380ZKBAE	BRFC164704G	R:CARBON FIXED CHIP(1608)	47 1/16W J TAPE	R208
AT380ZKBAE	BRFC163304G	R:CARBON FIXED CHIP(1608)	33 1/16W J TAPE	R209
AT380ZKBAE	BRFC164704G	R:CARBON FIXED CHIP(1608)	47 1/16W J TAPE	R210
AT380ZKBAE	BRFC161014G	R:CARBON FIXED CHIP(1608)	100 1/16W J TAPE	R211
AT380ZKBAE	BRFC163324G	R:CARBON FIXED CHIP(1608)	3.3K 1/16W J TAPE	R212
AT380ZKBAE	BRFC165614G	R:CARBON FIXED CHIP(1608)	560 1/16W J TAPE	R213
AT380ZKBAE	BRFC163314G	R:CARBON FIXED CHIP(1608)	330 1/16W J TAPE	R214
AT380ZKBAE	BRFC161014G	R:CARBON FIXED CHIP(1608)	100 1/16W J TAPE	R215
AT380ZKBAE	BRFC180004G	R:CARBON FIXED CHIP(3216)	0 1/8W J TAPE	R216
AT380ZKBAE	BRFC164704G	R:CARBON FIXED CHIP(1608)	47 1/16W J TAPE	R217
AT380ZKBAE	BRFC180004G	R:CARBON FIXED CHIP(3216)	0 1/8W J TAPE	R220
AT380ZKBAE	BRFC163324G	R:CARBON FIXED CHIP(1608)	3.3K 1/16W J TAPE	R221
AT380ZKBAE	BRFC163324G	R:CARBON FIXED CHIP(1608)	3.3K 1/16W J TAPE	R227
AT380ZKBAE	BRFC164724G	R:CARBON FIXED CHIP(1608)	4.7K 1/16W J TAPE	R236
AT380ZKBAE	BRFC162724G	R:CARBON FIXED CHIP(1608)	2.7K 1/16W J TAPE	R237
AT380ZKBAE	BRFC161054G	R:CARBON FIXED CHIP(1608)	1M 1/16W J TAPE	R238
AT380ZKBAE	BRFC161014G	R:CARBON FIXED CHIP(1608)	100 1/16W J TAPE	R243
AT380ZKBAE	BRFC161024G	R:CARBON FIXED CHIP(1608)	1K 1/16W J TAPE	R246
AT380ZKBAE	BRFC161044G	R:CARBON FIXED CHIP(1608)	100K 1/16W J TAPE	R247
AT380ZKBAE	BRFC161044G	R:CARBON FIXED CHIP(1608)	100K 1/16W J TAPE	R248
AT380ZKBAE	BRFC161024G	R:CARBON FIXED CHIP(1608)	1K 1/16W J TAPE	R249
AT380ZKBAE	BRFC164724G	R:CARBON FIXED CHIP(1608)	4.7K 1/16W J TAPE	R251
AT380ZKBAE	BRFC161054G	R:CARBON FIXED CHIP(1608)	1M 1/16W J TAPE	R252
AT380ZKBAE	BRFC162224G	R:CARBON FIXED CHIP(1608)	2.2K 1/16W J TAPE	R253
AT380ZKBAE	BRFC161024G	R:CARBON FIXED CHIP(1608)	1K 1/16W J TAPE	R254
AT380ZKBAE	BRFC161024G	R:CARBON FIXED CHIP(1608)	1K 1/16W J TAPE	R255
AT380ZKBAE	BRFC162244G	R:CARBON FIXED CHIP(1608)	220K 1/16W J TAPE	R256
AT380ZKBAE	BRFC162244G	R:CARBON FIXED CHIP(1608)	220K 1/16W J TAPE	R257
AT380ZKBAE	BRFC162214G	R:CARBON FIXED CHIP(1608)	220 1/16W J TAPE	R258
AT380ZKBAE	BRFC165614G	R:CARBON FIXED CHIP(1608)	560 1/16W J TAPE	R259
AT380ZKBAE	BRFC180004G	R:CARBON FIXED CHIP(3216)	0 1/8W J TAPE	R260
AT380ZKBAE	BRFC162244G	R:CARBON FIXED CHIP(1608)	220K 1/16W J TAPE	R261
AT380ZKBAE	BRFC162224G	R:CARBON FIXED CHIP(1608)	2.2K 1/16W J TAPE	R262
AT380ZKBAE	BRFC160004G	R:CARBON FIXED CHIP(1608)	0 1/16W J TAPE	R263
AT380ZKBAE	BRFC160004G	R:CARBON FIXED CHIP(1608)	0 1/16W J TAPE	R264
AT380ZKBAE	BRFC161834G	R:CARBON FIXED CHIP(1608)	18K 1/16W J TAPE	R265
AT380ZKBAE	BRFC160004G	R:CARBON FIXED CHIP(1608)	0 1/16W J TAPE	R266
AT380ZKBAE	BRFC161524G	R:CARBON FIXED CHIP(1608)	1.5K 1/16W J TAPE	R267
AT380ZKBAE	BRFC164734G	R:CARBON FIXED CHIP(1608)	47K 1/16W J TAPE	R273
AT380ZKBAE	BRFC168204G	R:CARBON FIXED CHIP(1608)	82 1/16W J TAPE	R274
AT380ZKBAE	BRFC128204G	R:CARBON FIXED CHIP(5025)	82 1/2W J TAPE	R275
AT380ZKBAE	BRFC121014G	R:CARBON FIXED CHIP(5025)	100 1/2W J TAPE	R276

AT380ZKBAE	BRFC161824G	R:CARBON FIXED CHIP(1608)	1.8K 1/16W J TAPE	R277
AT380ZKBAE	BRFC161024G	R:CARBON FIXED CHIP(1608)	1K 1/16W J TAPE	R278
AT380ZKBAE	BRFC161824G	R:CARBON FIXED CHIP(1608)	1.8K 1/16W J TAPE	R279
AT380ZKBAE	BRFC010004G	R:CARBON FIXED CHIP(2125)	0 1/10W J TAPE	R280
AT380ZKBAE	BRFC163324G	R:CARBON FIXED CHIP(1608)	3.3K 1/16W J TAPE	R281
AT380ZKBAE	BRFC162224G	R:CARBON FIXED CHIP(1608)	2.2K 1/16W J TAPE	R282
AT380ZKBAE	BRFC161524G	R:CARBON FIXED CHIP(1608)	1.5K 1/16W J TAPE	R283
AT380ZKBAE	BRFC164734G	R:CARBON FIXED CHIP(1608)	47K 1/16W J TAPE	R284
AT380ZKBAE	BRFC180004G	R:CARBON FIXED CHIP(3216)	0 1/8W J TAPE	R300
AT380ZKBAE	BRFC161514G	R:CARBON FIXED CHIP(1608)	150 1/16W J TAPE	R301
AT380ZKBAE	BRFC162214G	R:CARBON FIXED CHIP(1608)	220 1/16W J TAPE	R302
AT380ZKBAE	BRFC161024G	R:CARBON FIXED CHIP(1608)	1K 1/16W J TAPE	R303
AT380ZKBAE	BRFC161004G	R:CARBON FIXED CHIP(1608)	10 1/16W J TAPE	R304
AT380ZKBAE	BRFC163334G	R:CARBON FIXED CHIP(1608)	33K 1/16W J TAPE	R305
AT380ZKBAE	BRFC162214G	R:CARBON FIXED CHIP(1608)	220 1/16W J TAPE	R306
AT380ZKBAE	BRFC162214G	R:CARBON FIXED CHIP(1608)	220 1/16W J TAPE	R307
AT380ZKBAE	BRFC164714G	R:CARBON FIXED CHIP(1608)	470 1/16W J TAPE	R308
AT380ZKBAE	BRFC163334G	R:CARBON FIXED CHIP(1608)	33K 1/16W J TAPE	R309
AT380ZKBAE	BRFC161054G	R:CARBON FIXED CHIP(1608)	1M 1/16W J TAPE	R310
AT380ZKBAE	BRFC164734G	R:CARBON FIXED CHIP(1608)	47K 1/16W J TAPE	R311
AT380ZKBAE	BRFC161034G	R:CARBON FIXED CHIP(1608)	10K 1/16W J TAPE	R312
AT380ZKBAE	BRFC164724G	R:CARBON FIXED CHIP(1608)	4.7K 1/16W J TAPE	R313
AT380ZKBAE	BRFT141034G	R:CARBON AXIAL LEAD (52)	10K 1/4W J TAPE	R314
AT380ZKBAE	BRFC162224G	R:CARBON FIXED CHIP(1608)	2.2K 1/16W J TAPE	R315
AT380ZKBAE	BRFC161514G	R:CARBON FIXED CHIP(1608)	150 1/16W J TAPE	R316
AT380ZKBAE	BRFC164714G	R:CARBON FIXED CHIP(1608)	470 1/16W J TAPE	R317
AT380ZKBAE	BRFC166814G	R:CARBON FIXED CHIP(1608)	680 1/16W J TAPE	R318
AT380ZKBAE	BRFC161034G	R:CARBON FIXED CHIP(1608)	10K 1/16W J TAPE	R319
AT380ZKBAE	BRFC161024G	R:CARBON FIXED CHIP(1608)	1K 1/16W J TAPE	R320
AT380ZKBAE	BRFC161034G	R:CARBON FIXED CHIP(1608)	10K 1/16W J TAPE	R322
AT380ZKBAE	BRFC160004G	R:CARBON FIXED CHIP(1608)	0 1/16W J TAPE	R323
AT380ZKBAE	BRFC161034G	R:CARBON FIXED CHIP(1608)	10K 1/16W J TAPE	R324
AT380ZKBAE	BRFC164724G	R:CARBON FIXED CHIP(1608)	4.7K 1/16W J TAPE	R325
AT380ZKBAE	BRFC160004G	R:CARBON FIXED CHIP(1608)	0 1/16W J TAPE	R326
AT380ZKBAE	BRFC161024G	R:CARBON FIXED CHIP(1608)	1K 1/16W J TAPE	R327
AT380ZKBAE	BRFC161034G	R:CARBON FIXED CHIP(1608)	10K 1/16W J TAPE	R328
AT380ZKBAE	BRFC160004G	R:CARBON FIXED CHIP(1608)	0 1/16W J TAPE	R329
AT380ZKBAE	BRFC160004G	R:CARBON FIXED CHIP(1608)	0 1/16W J TAPE	R330
AT380ZKBAE	BRFC161054G	R:CARBON FIXED CHIP(1608)	1M 1/16W J TAPE	R331
AT380ZKBAE	BRFC160004G	R:CARBON FIXED CHIP(1608)	0 1/16W J TAPE	R332
AT380ZKBAE	BRFC161034G	R:CARBON FIXED CHIP(1608)	10K 1/16W J TAPE	R333
AT380ZKBAE	BRFC162244G	R:CARBON FIXED CHIP(1608)	220K 1/16W J TAPE	R334
AT380ZKBAE	BRFC161044G	R:CARBON FIXED CHIP(1608)	100K 1/16W J TAPE	R335
AT380ZKBAE	BRFC160004G	R:CARBON FIXED CHIP(1608)	0 1/16W J TAPE	R336
AT380ZKBAE	BRFC160004G	R:CARBON FIXED CHIP(1608)	0 1/16W J TAPE	R337
AT380ZKBAE	BRFC164724G	R:CARBON FIXED CHIP(1608)	4.7K 1/16W J TAPE	R338
AT380ZKBAE	BRFC160004G	R:CARBON FIXED CHIP(1608)	0 1/16W J TAPE	R339
AT380ZKBAE	BRFC180004G	R:CARBON FIXED CHIP(3216)	0 1/8W J TAPE	R340

AT380ZKBAE	BRFC160004G	R:CARBON FIXED CHIP(1608)	0 1/16W J TAPE	R342
AT380ZKBAE	BRFC160004G	R:CARBON FIXED CHIP(1608)	0 1/16W J TAPE	R343
AT380ZKBAE	BRFC180004G	R:CARBON FIXED CHIP(3216)	0 1/8W J TAPE	R344
AT380ZKBAE	BRFC161034G	R:CARBON FIXED CHIP(1608)	10K 1/16W J TAPE	R347
AT380ZKBAE	BRFC161034G	R:CARBON FIXED CHIP(1608)	10K 1/16W J TAPE	R348
AT380ZKBAE	BRFC161034G	R:CARBON FIXED CHIP(1608)	10K 1/16W J TAPE	R350
AT380ZKBAE	BRFC161034G	R:CARBON FIXED CHIP(1608)	10K 1/16W J TAPE	R352
AT380ZKBAE	BRFC162224G	R:CARBON FIXED CHIP(1608)	2.2K 1/16W J TAPE	R353
AT380ZKBAE	BRFC164734G	R:CARBON FIXED CHIP(1608)	47K 1/16W J TAPE	R354
AT380ZKBAE	BRFC165624G	R:CARBON FIXED CHIP(1608)	5.6K 1/16W J TAPE	R360
AT380ZKBAE	BRFC160004G	R:CARBON FIXED CHIP(1608)	0 1/16W J TAPE	R368
AT380ZKBAE	BRFC160004G	R:CARBON FIXED CHIP(1608)	0 1/16W J TAPE	R369
AT380ZKBAE	BRFC161034G	R:CARBON FIXED CHIP(1608)	10K 1/16W J TAPE	R370
AT380ZKBAE	BRFC160004G	R:CARBON FIXED CHIP(1608)	0 1/16W J TAPE	R371
AT380ZKBAE	BRFC160004G	R:CARBON FIXED CHIP(1608)	0 1/16W J TAPE	R372
AT380ZKBAE	BRFC161024G	R:CARBON FIXED CHIP(1608)	1K 1/16W J TAPE	R373
AT380ZKBAE	BRFC160004G	R:CARBON FIXED CHIP(1608)	0 1/16W J TAPE	R374
AT380ZKBAE	BRFC160004G	R:CARBON FIXED CHIP(1608)	0 1/16W J TAPE	R376
AT380ZKBAE	BRFC160004G	R:CARBON FIXED CHIP(1608)	0 1/16W J TAPE	R377
AT380ZKBAE	BRFC160004G	R:CARBON FIXED CHIP(1608)	0 1/16W J TAPE	R378
AT380ZKBAE	BRFC168224G	R:CARBON FIXED CHIP(1608)	8.2K 1/16W J TAPE	R382
AT380ZKBAE	BRFC161024G	R:CARBON FIXED CHIP(1608)	1K 1/16W J TAPE	R383
AT380ZKBAE	BRFC161024G	R:CARBON FIXED CHIP(1608)	1K 1/16W J TAPE	R384
AT380ZKBAE	BRFC161024G	R:CARBON FIXED CHIP(1608)	1K 1/16W J TAPE	R385
AT380ZKBAE	BRFC161024G	R:CARBON FIXED CHIP(1608)	1K 1/16W J TAPE	R386
AT380ZKBAE	BRFC161034G	R:CARBON FIXED CHIP(1608)	10K 1/16W J TAPE	R387
AT380ZKBAE	BRFC161034G	R:CARBON FIXED CHIP(1608)	10K 1/16W J TAPE	R388
AT380ZKBAE	BRPA611034G	R:CARBON AXIAL LEAD (26)	10K 1/6W J TAPE	R395
AT380ZKBAE	BRPA611034G	R:CARBON AXIAL LEAD (26)	10K 1/6W J TAPE	R396
AT380ZKBAE	BRPA611034G	R:CARBON AXIAL LEAD (26)	10K 1/6W J TAPE	R397
AT380ZKBAE	BRPA611034G	R:CARBON AXIAL LEAD (26)	10K 1/6W J TAPE	R398
AT380ZKBAE	BRFC180004G	R:CARBON FIXED CHIP(3216)	0 1/8W J TAPE	R400
AT380ZKBAE	BRFC163924G	R:CARBON FIXED CHIP(1608)	3.9K 1/16W J TAPE	R401
AT380ZKBAE	BRFC161034G	R:CARBON FIXED CHIP(1608)	10K 1/16W J TAPE	R402
AT380ZKBAE	BRFC166844G	R:CARBON FIXED CHIP(1608)	680K 1/16W J TAPE	R403
AT380ZKBAE	BRFC162224G	R:CARBON FIXED CHIP(1608)	2.2K 1/16W J TAPE	R404
AT380ZKBAE	BRFC168224G	R:CARBON FIXED CHIP(1608)	8.2K 1/16W J TAPE	R405
AT380ZKBAE	BRFC161034G	R:CARBON FIXED CHIP(1608)	10K 1/16W J TAPE	R406
AT380ZKBAE	BRFC165644G	R:CARBON FIXED CHIP(1608)	560K 1/16W J TAPE	R407
AT380ZKBAE	BRFC162224G	R:CARBON FIXED CHIP(1608)	2.2K 1/16W J TAPE	R408
AT380ZKBAE	BRFC163334G	R:CARBON FIXED CHIP(1608)	33K 1/16W J TAPE	R409
AT380ZKBAE	BRFC162214G	R:CARBON FIXED CHIP(1608)	220 1/16W J TAPE	R410
AT380ZKBAE	BRFC161034G	R:CARBON FIXED CHIP(1608)	10K 1/16W J TAPE	R411
AT380ZKBAE	BRFC161034G	R:CARBON FIXED CHIP(1608)	10K 1/16W J TAPE	R412
AT380ZKBAE	BRFC165644G	R:CARBON FIXED CHIP(1608)	560K 1/16W J TAPE	R413
AT380ZKBAE	BRTG0584502	R:SEMI-FIXED	RT-584 5KB	RT001
AT380ZKBAE	BRTG0584502	R:SEMI-FIXED	RT-584 5KB	RT002
AT380ZKBAE	BRTG0584103	R:SEMI-FIXED	RT-584 10KB	RT201

AT380ZKBAE	BRTG0584502	R:SEMI-FIXED	RT-584 5KB	RT202
AT380ZKBAE	BRTG0584102	R:SEMI-FIXED	RT-584 1KB	RT203
AT380ZKBAE	BRTG0584502	R:SEMI-FIXED	RT-584 5KB	RT204
AT380ZKBAE	BRTG0584503	R:SEMI-FIXED	RT-584 50KB	RT205
AT380ZKBAE	BRTG0584501	R:SEMI-FIXED	RT-584 500B	RT401
AT380ZKBAE	BTFG0577001	TRANS	TF-577	T201
AT380ZKBAE	BTFG0083001	TRANSFORMER:AF CHOKE	TF-083	T301
AT380ZKBAE	BTPG0138001	TEST PIN	TP-138 IPS-1820-01-PT	TP201
AT380ZKBAE	BQXG0975001	CRYSTAL	QX-975 10.24MHZ	X301
AT380ZKBAE	BQXG0982001	CRYSTAL	QX-982 3.6864MHZ	X302
AT380ZKBAW	CUAH013011G	WIRE	UL 1007 #24 3-130- 3 GRY	W001
AT380ZKBAW	CUAJ013011G	WIRE	UL 1007 #24 3-130- 3 WHT	W002
AT380ZKBAW	CUPJ003511G	WIRE W-004	UL 1571 #26 3- 35- 3 WHT	W003
AT380ZKBBE	BPAG0451AB2	PCB:FRONT	PA-451AB 2/7	B551
AT380ZKBBE	BCML811035G	C:CERAMIC M/L (1608) TAPE	0.01UF 50V K B	C551
AT380ZKBBE	BCML811035G	C:CERAMIC M/L (1608) TAPE	0.01UF 50V K B	C552
AT380ZKBBE	BCML811035G	C:CERAMIC M/L (1608) TAPE	0.01UF 50V K B	C553
AT380ZKBBE	BCML811035G	C:CERAMIC M/L (1608) TAPE	0.01UF 50V K B	C554
AT380ZKBBE	BCML811035G	C:CERAMIC M/L (1608) TAPE	0.01UF 50V K B	C557
AT380ZKBBE	BCML811035G	C:CERAMIC M/L (1608) TAPE	0.01UF 50V K B	C558
AT380ZKBBE	BCML811025G	C:CERAMIC M/L (1608) TAPE	0.001UF 50V K B	C559
AT380ZKBBE	BCML811025G	C:CERAMIC M/L (1608) TAPE	0.001UF 50V K B	C560
AT380ZKBBE	BDLG0537001	LIQUID CRYSTAL DISPLAY	DL-537 912-442A-4115	DP551
AT380ZKBBE	BLZG0207601	INDUCTOR:MOLDED CHIP	LZ-207 MMZ1608Y601BT 600	L551
AT380ZKBBE	BLZG0207601	INDUCTOR:MOLDED CHIP	LZ-207 MMZ1608Y601BT 600	L552
AT380ZKBBE	BLZG0207601	INDUCTOR:MOLDED CHIP	LZ-207 MMZ1608Y601BT 600	L553
AT380ZKBBE	BLZG0207601	INDUCTOR:MOLDED CHIP	LZ-207 MMZ1608Y601BT 600	L554
AT380ZKBBE	BRFC163914G	R:CARBON FIXED CHIP(1608)	390 1/16W J TAPE	R551
AT380ZKBBE	BRFC163914G	R:CARBON FIXED CHIP(1608)	390 1/16W J TAPE	R552
AT380ZKBBE	BRFC161024G	R:CARBON FIXED CHIP(1608)	1K 1/16W J TAPE	R553
AT380ZKBBE	BRFC161024G	R:CARBON FIXED CHIP(1608)	1K 1/16W J TAPE	R554
AT380ZKBBE	BSWG0877001	SWITCH:TACT	SW-877 TC-1105	S551
AT380ZKBBE	BSWG0877001	SWITCH:TACT	SW-877 TC-1105	S552
AT380ZKBCE	BPAG0451AB3	PCB:VOL	PA-451AB 3/7	B601
AT380ZKBCE	BWFG3850809	FLAT CABLE	WF-385 3-80-3 5P	FC601
AT380ZKBCE	BRVG1015001	VOLUME	RV-1015 TP96N00N 25F A503	VR601
AT380ZKBDE	BPAG0451AB4	PCB:SQ	PA-451AB 4/7	B651
AT380ZKBDE	BWFG3820359	FLAT CABLE	WF-382 3-35-3 2P	FC651
AT380ZKBDE	BRVG1019001	VOLUME	RV-1019 TP96N00 25.5F B502	VR651
AT380ZKBEE	BPAG0451AB5	PCB:CH SW	PA-451AB 5/7	B701
AT380ZKBEE	BCML811035G	C:CERAMIC M/L (1608) TAPE	0.01UF 50V K B	C701
AT380ZKBEE	BCML811035G	C:CERAMIC M/L (1608) TAPE	0.01UF 50V K B	C702
AT380ZKBEE	BWFG3830509	FLAT CABLE	WF-383 3-50-3 3P	FC701
AT380ZKBEE	BRFC161024G	R:CARBON FIXED CHIP(1608)	1K 1/16W J TAPE	R701
AT380ZKBEE	BRFC161024G	R:CARBON FIXED CHIP(1608)	1K 1/16W J TAPE	R702
AT380ZKBEE	BSRG0470001	SW:ROTARY	SR-470	S701
AT380ZKBFE	BPAG0451AB6	PCB:LED L	PA-451AB 6/7	B801
AT380ZKBFE	BDAG1031001	DIODE:LED	LTST-C190KFKT	D801

AT380ZKBFE	BDAG1031001	DIODE:LED	LTST-C190KFKT	D802
AT380ZKBGE	BPAG0451AB7	PCB:LED R	PA-451AB 7/7	B851
AT380ZKBGE	BDAG1031001	DIODE:LED	LTST-C190KFKT	D851
AT380ZKBGE	BDAG1031001	DIODE:LED	LTST-C190KFKT	D852
AT380ZKBYE	BDEG4462001	INTEGRATED CIRCUIT	E-TDA2003V	IC501
AT380ZKBYE	BDEG0924001	INTEGRATED CIRCUIT	L7808CV	IC502
AT380ZKBYE	BJKG1596003	JACK:ANT W/O ACC	JK-1596 M-RM-L 102	J501
AT380ZKBYE	BJKG1547001	JACK	JK-1547	J551
AT380ZKBYE	BDBK1134117	TRANSISTOR	DB-129 2SB1134-R	Q501
AT380ZKBYE	BDCN0336001	FIELD EFFECT TRANSISTOR	DC-336 RD06HHF1-101	Q502
AT380ZKBYE	BSPG0474001	SPEAKER	SP-474 YD77A-64F8	SP501
AT380ZKBYE	BWZY1105001	CORD:DC CORD	WZ-1105 1500 W/P	WA501
AT380ZKXYE	BMKG0656001	MICROPHONE	MK-656 IP743-H010605	MC951